Volvo Compact Excavators 5.7-6.8 t 63 hp

EC65

Volvo Construction Equipment

EC65

The proven success of the previous generation is taken to new heights in the EC65 with a range of impressive performance improvements, new intuitive 8” display and enhanced uptime features. Versatile, robust and high performing – get ready for maximum results.

Compact machine, big performance

The versatile and hard-working EC65 is a compact machine designed to achieve big results. Featuring a range of performance upgrades, including 4 % more engine power, improved swing performance, 6 % more lifting capacity and 9 % more boom lifting force, this Volvo Compact Excavator is ready to deliver across utilities, building, agriculture, landscaping, forestry and more. With a new 8” HD intuitive touchscreen display, enhanced controls and a range of comfort improvements, the EC65 continues the proud Volvo tradition of providing class-leading operator environments to the market. Engineered for maximum uptime, our machines feature easy servicing, longer service intervals, and a larger fuel tank – so you can work harder for longer.

Operator control

- New 8” high-definition touchscreen interface
- Operators can now control all essential machine functions from the display
- Keyless engine start/stop
- Larger right-hand console for improved dozer blade control
- Hydraulic dozer blade lever with integrated high-speed travel and floating mode buttons

Extensive performance upgrades

- 4 % more engine power
- 5 % improved swing performance on the slope
- 5 % increased swing pressure and torque
- 9 % increase in boom lifting force

Operator comfort

- New, wider and height adjustable arm rests
- New tiltable left-hand console for easy entry/exit
- Conveniently located in-cab storage locations, with cupholder, document holder, phone holder and glove compartment
- USB charging sockets

Easy servicing

- Wide opening hood
- Ground level service access
- Grouped filters
- 16-litres less hydraulic oil

Longer service intervals

- DPF cleaning every 8 000 hours (up from 6 000 compared to the previous generation)
- Hydraulic return filter changes every 1 500 hours – 3 times longer than the previous generation
- 3 000-hour suction filter interval (50 % longer than previous generation)
- 6 000-hour long life oil interval (20 % longer than previous generation)

Work for longer

- Larger 120 litre fuel tank capacity (14 % increase compared to previous generation)
- Auto engine shutdown (operator sets pre-set shutdown time between 5-60 mins)
- CareTrack telematics with Active Care
- New software architecture for seamless future updates

Attachment versatility

- Range of Volvo attachments
- 120 l/min hydraulic flow for attachments/accessories (double the previous generation)
- Tiltrotator from the factory

New options

- New sliding air suspension seat, including 3-point seatbelt
- Additional oil drain line
- Engine block heater
- Side view camera
- White noise alarm

More power to perform

- Dig powerfully, load efficiently, swing smoothly and crawl quickly
- 4 % more engine power, 6 % more lifting capacity, 9 % increase in boom lifting force
- Improved swing performance on the slope
- 5 % increased swing pressure and torque
- Fast, reliable results across a wide range of applications

New intuitive display

- Featuring a new 8” high-definition touchscreen interface inherited from larger Volvo Excavators
- Operators can now control all essential machine functions from the convenience of the display and simplified interface
- The easy-to-use menu intuitively guides operators through key machine functions including attachment pre-set and selection, rear and side camera view, mobile phone Bluetooth pairing, and serviceability interval adjustments.

Easy to service

- Servicing is quick and easy
- Wide opening hood
- Safe and easy access
- All service check points are located under the wide-opening engine hood and are accessed from ground level
- Grouped filters ensure regular maintenance is straightforward, helping to maximize uptime

One machine, many jobsites

- With range of Volvo Attachments, the EC65 can be equipped to take on a wide array of tasks
- With double the auxiliary hydraulic flow compared to the previous generation, the machine can now handle the most powerful attachments
- Whether utilities, building, agriculture, landscaping, forestry and more; Volvo attachments are designed to work in perfect harmony with your Volvo machine to deliver maximum results

Volvo EC65 in detail

Engine		
The new engine which provide excellent performance is equipped with a four-cylinder, vertical, electronic controlled high pressure fuel injectors, in-line turbo charger and water cooled diesel engine type. This engine fully meets the demands of the latest Tier 4f (Stage V) emissions regulations.		
Model	Brand	D2.6H
Max. power at	rpm	2 200
Net (ISO 9249/SAEJ1349)	kW	45.1
Net (ISO 9249/SAEJ1349)	hp	61.3
Gross (SAE J1995)	kW	46
Gross (SAE J1995)	hp	62.5
Max. torque	Nm	225
at engine speed	rpm	1 500
No. of cylinders		4
Displacement	lit	2.62
Bore	mm	87
Stroke	mm	110

Electrical System		
Voltage	V	12
Battery capacity	Ah	100
Alternator	V/Ah	12/90
Starter motor output	V - kW	12 - 2.5

Undercarriage		
The undercarriage has a robust X-shaped frame. Greased and sealed track chains are standard.		
Track shoes		2 x 39
Link pitch	mm	135
Shoe width - steel	mm	380 / 500
Shoe width - rubber	mm	400
Bottom rollers		2 x 5
Top rollers		2 x 16

Travel System		
Each track is powered by an automatic two-speed shift travel motor. The track brakes are multi-disc, spring-applied and hydraulic released. The travel motor, brake and planetary gears are well protected within the track frame.		
Max. travel speed low	km/h	2.4
Max. travel speed high	km/h	4.4
Max. drawbar pull	kN	52.8
Gradeability	°	35

Swing System		
-No need for gear oil replacement The lubricating system uses hydraulic operation oil for the reduction gear, eliminating the need for gear oil replacement. -Built-in parking brake Parking brake can be built into the hydraulic motor, enabling safer parking on an incline. -Shockless function Shockless relief is standard equipment to enable smooth traversing.		
Max. swing speed	rpm	9.1
Max. swing speed	kN/m	12.9

Service Refill		
Fuel tank	lit	120
Hydraulic system, total	lit	105
Hydraulic tank	lit	60
Engine oil	lit	11
Engine coolant	lit	10

Sound Level		
Interior sound level according to ISO 6396		
L_{pA}	dB	78
External sound level according to ISO 6395 and EU Noise Directive (2000/14/EC) and 474-1:2006 +A1:2009		
L_{WA}	dB	97

Hydraulic System		
Open center, Power Control system providing accurate controllability.		
Main pump: Variable-displacement pump		
Maximum flow	l/min	2 x 60.5
Swing pump: Dozer blader pump, Gear pump		
Maximum flow	l/min	35.6
Max. pressure		
Implement	MPa	22.6
Travel circuit	MPa	24.5
Swing circuit	MPa	20.6
Pilot circuit	MPa	3.2
Maximum flow for accessories	l/min	120
Maximum pressure for accessories	MPa	22.5
Maximum flow for 2nd accessory circuit	l/min	28
Maximum pressure for 2nd accessory circuit	MPa	15

Specifications

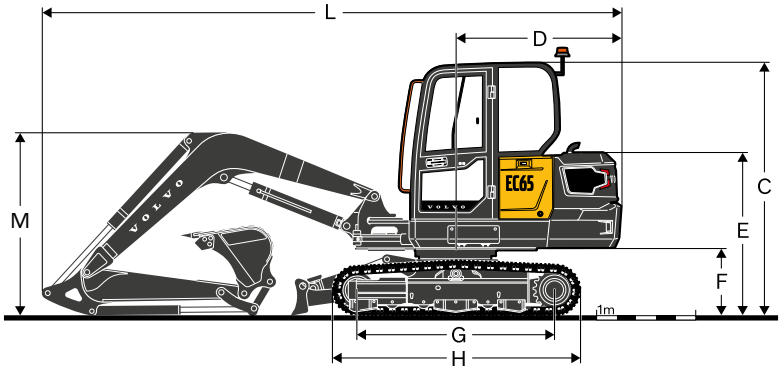

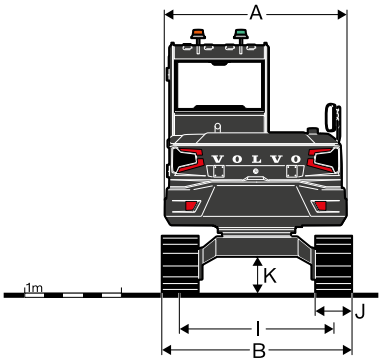

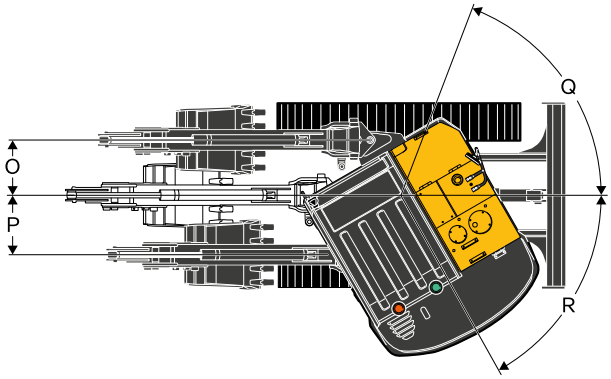

DIMENSIONS				
Description			**EC65**	
Boom		**Unit**	**3.0 m**	
Arm			**1.6 m**	**1.9 m**
A	Overall width of upper structure	mm	1 880	1 880
B	Overall width	mm	2 000	2 000
C	Overall height of cab**	mm	2 584	2 584
D	Tail swing radius	mm	1 690	1 690
E	Overall height of engine hood**	mm	1 655	1 655
F	Counterweight clearance *	mm	680	680
G	Tumbler length	mm	1 990	1 990
H	Track length	mm	2 500	2 500
I	Track gauge	mm	1 600	1 600
J	Shoe width	mm	380	380
K	Min. ground clearance *	mm	350	350
L	Overall length	mm	5 840	5 905
M	Overall height of boom	mm	1 854	1 978
O	Boom swing distance	mm	684	684
P	Boom swing distance	mm	755	755
Q	Boom swing angle	°	80	80
R	Boom swing angle	°	50	50

* Without shoe grouser

** Based on Steel track

Specifications

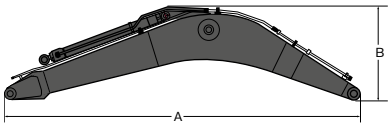

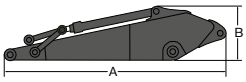

DIMENSIONS

			Boom				Arm	
Description		**Unit**	**3.0 m**	**Description**		**Unit**	**1.6 m**	**1.9 m**
A	Length	mm	3 110	A	Length	mm	2 102	2 402
B	Heigth	mm	1 192	B	Heigth	mm	488	497
Width		mm	336	Width		mm	300	300
Weight		kg	378	Weight		kg	168	181

Includes cylinder, piping and pin, excludes boom cyl. Pin

Includes cylinder, linkage and pin

DIMENSIONS

Dozer blade		Unit	Standard Dozer	Longer Dozer
A	Height	mm	350	350
	Width	mm	2 000	2 000
B	Lifting height	mm	351	405
C	Digging depth	mm	446	919

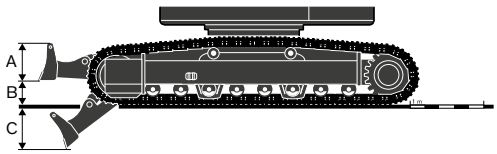

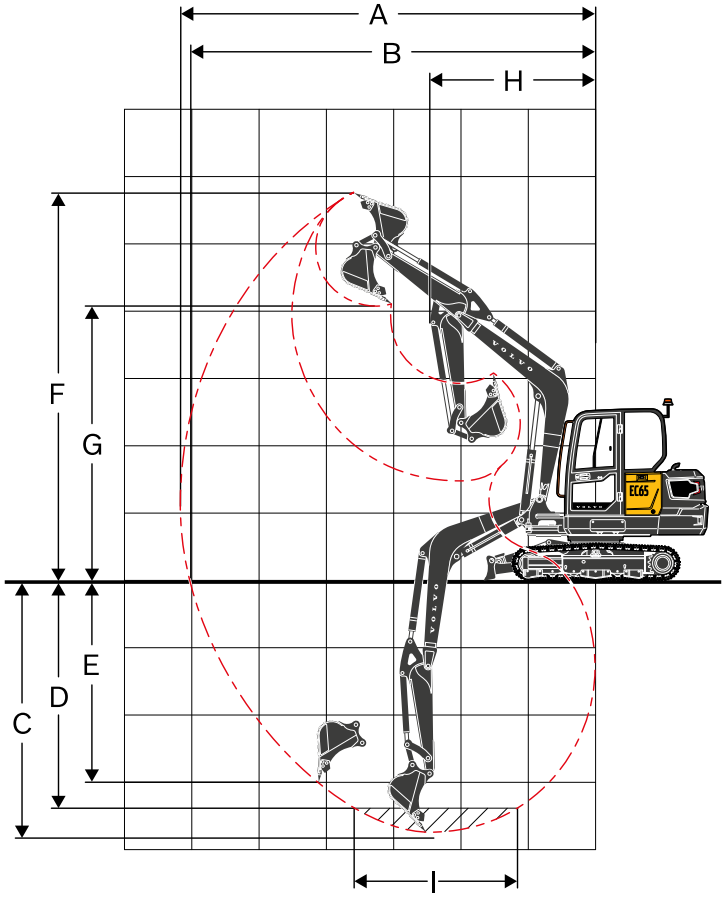

WORKING RANGES				
Description		**Unit**	**EC65**	
Boom		**m**	**3.0 m**	
Arm		**m**	**1.6 m**	**1.9 m**
A	Max. digging reach	mm	6 105	6 395
B	Max. digging reach on ground	mm	5 970	6 260
C	Max. digging depth	mm	3 695	3 995
D	Max.digging depth (I=2 440 mm level)	mm	3 295	3 640
E	Max. vertical wall digging depth	mm	2 625	2 900
F	Max. cutting height	mm	5 695	5 885
G	Max. dumping height	mm	4 150	4 340
H	Min. front swing radius	mm	2 465	2 470
DIGGING FORCES WITH DIRECT FIT BUCKET				
Breakout force (bucket)	SAE J1179	kN	37.7	37.7
	ISO 6015	kN	43.3	43.3
Tearout force (arm)	SAE J1179	kN	28.2	25.0
	ISO 6015	kN	28.8	25.4
Rotation angle, bucket		°	196	

Specifications

MACHINE WEIGHTS AND GROUND PRESSURE - EC65

Description	Shoe width	Operating weight	Ground pressure	Overall width	Operating weight	Ground pressure	Overall width
	mm	kg	kPa	mm	kg	kPa	mm
Steel track	380	6 070	36.1	2 000	6 095	36.3	2 000
	500	6 158	27.8	2 120	6 183	28.0	2 120
Rubber track	400	5 877	33.2	2 020	5 902	33.3	2 020
Rubber pad	400	6 229	34.9	2 020	6 254	35.1	2 020
		3.0 m boom, 1.6 m arm, 142 L bucket, 470 kg counterweight			3.0 m boom, 1.9 m arm, 142 L bucket, 470 kg counterweight		

BUCKETS

Width	Weight	Capacity
mm	kg	l
350	97	70
450	100	98
600	129	142
750	145	187
900	164	235
1 500	176	265

Max. permitted buckets
Note: 1. Bucket size based on ISO 7451, heaped material with a 1:1 angle of repose.
2. “Max. permitted sizes” are for reference only and are not necessarily available from the factory.
3. Bucket widths are less than bucket’s tip radius.

BUCKET SELECTION GUIDE

		3.0 m Boom, Direct Fit			
		1.6 m Arm		1.9 m Arm	
Description	Material density (t/m³)	Volume (L)	Weight (kg)	Volume (L)	Weight (kg)
GP Bucket	1.5	300	250	275	200
	1.8	275	200	250	200

LIFTING CAPACITY EC65

Lifting capacity at the arm end without bucket.
For lifting capacity including bucket. Simply subtract actual weight of the direct fit bucket or the bucket with quick coupler from the following values.

	Lifting hook related to ground level		1.0 m		2.0 m		3.0 m		4.0 m		5.0 m		Max reach		
			Along UC	Across UC	Along UC	Across UC	Along UC	Across UC	Along UC	Across UC	Along UC	Across UC	Along UC	Across UC	Max. reach
Boom : 3.0 m Arm : 1.6 m GP Shoe : 400 mm Rubber track CWT : 470 kg Dozerblade: Down	4 m	kg							*1 600	1 230			*1 340	1 050	4.4 m
	3 m	kg							*1 660	1 210			*1 240	840	5.0 m
	2 m	kg					*2 560	1 790	*1 900	1 160	*1 610	820	*1 230	750	5.3 m
	1 m	kg					*3 190	1 650	*2 160	1 100	*1 690	790	*1 290	720	5.3 m
	0 m	kg			*1 360	*1 360	*3 340	1 580	*2 260	1 060	*1 670	770	*1 440	740	5.2 m
	-1 m	kg	*2 440	*2 440	*3 250	3 080	*3 050	1 570	*2 110	1 040			*1 550	830	4.7 m
	-2 m	kg			*3 420	3 140	*2 320	1 600					*1 430	1 080	4.0 m
Boom : 3.0 m Arm : 1.6 m GP Shoe : 400 mm Rubber track CWT : 470 kg Dozerblade: Up	4 m	kg							1 550	1 210			1 340	1 030	4.4 m
	3 m	kg							1 530	1 190			1 080	830	5.0 m
	2 m	kg					2 310	1 750	1 480	1 140	1 050	800	960	740	5.3 m
	1 m	kg					2 160	1 620	1 420	1 080	1 020	780	930	710	5.3 m
	0 m	kg			*1 360	*1 360	2 090	1 550	1 370	1 030	1 000	760	960	730	5.2 m
	-1 m	kg	*2 440	*2 440	*3 250	3 000	2 080	1 540	1 360	1 020			1 080	810	4.7 m
	-2 m	kg			*3 420	3 060	2 110	1 570					1 400	1 060	4.0 m
Boom : 3.0 m Arm : 1.6 m GP Shoe : 380 mm Steel Track CWT : 470 kg Dozerblade: Down	4 m	kg							*1 600	1 270			*1 340	1 090	4.4 m
	3 m	kg							*1 660	1 250			*1 240	870	5.0 m
	2 m	kg					*2 560	1 850	*1 900	1 200	*1 610	850	*1 230	780	5.3 m
	1 m	kg					*3 190	1 710	*2 160	1 140	*1 690	820	*1 290	750	5.3 m
	0 m	kg			*1 360	*1 360	*3 340	1 640	*2 260	1 100	*1 670	800	*1 440	770	5.2 m
	-1 m	kg	*2 440	*2 440	*3 250	3 190	*3 050	1 630	*2 110	1 080			*1 550	860	4.7 m
	-2 m	kg			*3 420	3 250	*2 320	1 660					*1 430	1 120	4.0 m
Boom : 3.0 m Arm : 1.6 m GP Shoe : 380 mm Steel Track CWT : 470 kg Dozerblade: Up	4 m	kg							*1 600	1 240			*1 340	1 070	4.4 m
	3 m	kg							1 580	1 230			1 110	860	5.0 m
	2 m	kg					2 390	1 810	1 530	1 180	1 080	830	1 000	770	5.3 m
	1 m	kg					2 240	1 670	1 460	1 120	1 060	810	960	730	5.3 m
	0 m	kg			*1 360	*1 360	2 170	1 610	1 420	1 070	1 040	790	990	760	5.2 m
	-1 m	kg	*2 440	*2 440	*3 250	3 110	2 160	1 600	1 410	1 060			1 120	850	4.7 m
	-2 m	kg			*3 420	3 170	2 180	1 620					*1 430	1 100	4.0 m
Boom : 3.0m Arm : 1.6m GP Shoe : 500 mm Steel Track CWT : 470 kg Dozerblade: Down	4 m	kg							*1 600	1 290			*1 340	1 110	4.4 m
	3 m	kg							*1 660	1 270			*1 240	890	5.0 m
	2 m	kg					*2 560	1 880	*1 900	1 220	*1 610	860	*1 230	790	5.3 m
	1 m	kg					*3 190	1 740	*2 160	1 160	*1 690	840	*1 290	760	5.3 m
	0 m	kg			*1 360	*1 360	*3 340	1 670	*2 260	1 110	*1 670	820	*1 440	780	5.2 m
	-1 m	kg	*2 440	*2 440	*3 250	3 240	*3 050	1 660	*2 110	1 100			*1 550	880	4.7 m
	-2 m	kg			*3 420	3 300	*2 320	1 690					*1 430	1 140	4.0 m
Boom : 3.0 m Arm : 1.6 m GP Shoe : 500 mm Steel Track CWT : 470 kg Dozerblade: Up	4 m	kg							*1 600	1 260			*1 340	1 090	4.4 m
	3 m	kg							1 600	1 250			1 130	870	5.0 m
	2 m	kg					2 420	1 840	1 550	1 190	1 100	850	1 010	780	5.3 m
	1 m	kg					2 270	1 700	1 490	1 130	1 070	820	980	750	5.3 m
	0 m	kg			*1 360	*1 360	2 200	1 630	1 440	1 090	1 050	800	1 010	770	5.2 m
	-1 m	kg	*2 440	*2 440	*3 250	3 160	2 190	1 620	1 430	1 080			1 130	860	4.7 m
	-2 m	kg			*3 420	3 220	2 220	1 650					*1 430	1 110	4.0 m

Notes: 1. The above loads are in compliance with SAE J1097 and ISO 10567 Hydraulic Excavator Lifting Capacity Standards. 2. Rated loads do not exceed 87% of hydraulic lifting capacity or 75% of tipping load. 3. Rated loads marked with an asterisk (*) are limited by hydraulic capacity rather than tipping load.

Specifications

LIFTING CAPACITY EC65

Lifting capacity at the arm end without bucket.
For lifting capacity including bucket. Simply subtract actual weight of the direct fit bucket or the bucket with quick coupler from the following values.

	Lifting hook related to ground level		1.0 m		2.0 m		3.0 m		4.0 m		5.0 m		Max reach		
			Along UC	Across UC	Along UC	Across UC	Along UC	Across UC	Along UC	Across UC	Along UC	Across UC	Along UC	Across UC	Max. reach
Boom : 3.0 m Arm : 1.6 m GP Shoe : 400 mm Rubber pad CWT : 470 kg Dozerblade: Down	4 m	kg							*1 600	1 280			*1 340	1 100	4.4 m
	3 m	kg							*1 660	1 260			*1 240	880	5.0 m
	2 m	kg					*2 560	1 860	*1 900	1 210	*1 610	860	*1 230	790	5.3 m
	1 m	kg					*3 190	1 720	*2 160	1 150	*1 690	830	*1 290	760	5.3 m
	0 m	kg			*1 360	*1 360	*3 340	1 660	*2 260	1 110	*1 670	810	*1 440	780	5.2 m
	-1 m	kg	*2 440	*2 440	*3 250	3 200	*3 050	1 640	*2 110	1 090			*1 550	870	4.7 m
	-2 m	kg			*3 420	3 260	*2 320	1 670					*1 430	1 130	4.0 m
Boom : 3.0 m Arm : 1.6 m GP Shoe : 400 mm Rubber pad CWT : 470 kg Dozerblade: Up	4 m	kg							*1 600	1 280			*1 340	1 100	4.4 m
	3 m	kg							1 620	1 260			1 140	880	5.0 m
	2 m	kg					2 450	1 860	1 570	1 210	1 110	860	1 030	790	5.3 m
	1 m	kg					2 300	1 720	1 500	1 150	1 090	830	990	760	5.3 m
	0 m	kg			*1 360	*1 360	2 230	1 660	1 460	1 110	1 070	810	1 020	780	5.2 m
	-1 m	kg	*2 440	*2 440	*3 250	3 200	2 210	1 640	1 450	1 090			1 150	870	4.7 m
	-2 m	kg			*3 420	3 260	2 240	1 670					*1 430	1 130	4.0 m
Boom : 3.0 m Arm : 1.9 m GP Shoe : 400 mm Rubber track CWT : 470 kg Dozerblade: Down	5 m	kg											*1 310	*1 310	3.8 m
	4 m	kg							*1 420	1 250			*1 100	930	4.7 m
	3 m	kg							*1 510	1 220	*1 450	840	*1 020	760	5.3 m
	2 m	kg					*2 290	1 820	*1 770	1 170	*1 530	820	*1 020	690	5.0 m
	1 m	kg					*3 010	1 660	*2 060	1 100	*1 630	790	*1 060	660	5.6 m
	0 m	kg			*1 520	*1 520	*3 310	1 570	*2 230	1 050	*1 680	760	*1 170	670	5.0 m
	-1 m	kg	*2 080	*2 080	*2 900	*2 900	*3 160	1 540	*2 170	1 020	*1 520	760	*1 400	740	5.1 m
	-2 m	kg	*3 430	*3 430	*4 030	3 070	*2 590	1 560	*1 730	1 030			*1 390	920	4.4 m
	-3 m	kg			*1 820	*1 820	*1 120	*1 120					*1 000	*1 000	3.1 m
Boom : 3.0 m Arm : 1.9 m GP Shoe : 400 mm Rubber track CWT : 470 kg Dozerblade: Up	5 m	kg											*1 310	*1 310	3.8 m
	4 m	kg							*1 420	1 230			*1 100	910	4.7 m
	3 m	kg							*1 510	1 200	1 070	820	980	750	5.3 m
	2 m	kg					*2 290	1 780	1 490	1 140	1 050	800	880	670	5.0 m
	1 m	kg					2 180	1 630	1 410	1 080	1 020	770	850	650	5.6 m
	0 m	kg			*1 520	*1 520	2 080	1 540	1 360	1 020	990	750	870	660	5.0 m
	-1 m	kg	*2 080	*2 080	*2 900	*2 900	2 050	1 510	1 340	1 000	980	740	960	730	5.1 m
	-2 m	kg	*3 430	*3 430	*4 030	2 990	2 070	1 530	1 350	1 010			1 200	900	4.4 m
	-3 m	kg			*1 820	*1 820	*1 120	*1 120					*1 000	*1 000	3.1 m
Boom : 3.0 m Arm : 1.9 m GP Shoe : 380 mm Steel track CWT : 470 kg Dozerblade: Down	5 m	kg											*1 310	*1 310	3.8 m
	4 m	kg							*1 420	1 290			*1 100	960	4.7 m
	3 m	kg							*1 510	1 260	*1 450	870	*1 020	790	5.3 m
	2 m	kg					*2 290	1 880	*1 770	1 210	*1 530	850	*1 020	710	5.0 m
	1 m	kg					*3 010	1 720	*2 060	1 140	*1 630	820	*1 060	690	5.6 m
	0 m	kg			*1 520	*1 520	*3 310	1 630	*2 230	1 090	*1 680	790	*1 170	700	5.0 m
	-1 m	kg	*2 080	*2 080	*2 900	*2 900	*3 160	1 600	*2 170	1 060	*1 520	790	*1 400	770	5.1 m
	-2 m	kg	*3 430	*3 430	*4 030	3 180	*2 590	1 620	*1 730	1 070			*1 390	960	4.4 m
	-3 m	kg			*1 820	*1 820	*1 120	*1 120					*1 000	*1 000	3.1 m

Notes: 1. The above loads are in compliance with SAE J1097 and ISO 10567 Hydraulic Excavator Lifting Capacity Standards. 2. Rated loads do not exceed 87% of hydraulic lifting capacity or 75% of tipping load. 3. Rated loads marked with an asterisk (*) are limited by hydraulic capacity rather than tipping load.

LIFTING CAPACITY EC65

Lifting capacity at the arm end without bucket.
For lifting capacity including bucket. Simply subtract actual weight of the direct fit bucket or the bucket with quick coupler from the following values.

	Lifting hook related to ground level		1.0 m		2.0 m		3.0 m		4.0 m		5.0 m		Max reach		
			Along UC	Across UC	Along UC	Across UC	Along UC	Across UC	Along UC	Across UC	Along UC	Across UC	Along UC	Across UC	Max. reach
Boom : 3.0 m Arm : 1.9 m GP Shoe : 380 mm Steel track CWT : 470 kg Dozerblade: Up	5 m	kg											*1 310	*1 310	3.8 m
	4 m	kg							*1 420	1 260			*1 100	940	4.7 m
	3 m	kg							*1 510	1 240	1 110	850	1 010	780	5.3 m
	2 m	kg					*2 290	1 840	1 540	1 180	1 080	830	920	700	5.0 m
	1 m	kg					2 250	1 680	1 460	1 110	1 050	800	880	670	5.6 m
	0 m	kg			*1 520	*1 520	2 150	1 590	1 410	1 060	1 030	780	910	690	5.0 m
	-1 m	kg	*2 080	*2 080	*2 900	*2 900	2 130	1 570	1 390	1 040	1 020	770	1 000	760	5.1 m
	-2 m	kg	*3 430	*3 430	*4 030	3 090	2 140	1 580	1 400	1 050			1 240	940	4.4 m
	-3 m	kg			*1 820	*1 820	*1 120	*1 120					*1 000	*1 000	3.1 m
Boom : 3.0 m Arm : 1.9 m GP Shoe : 500 mm Steel track CWT : 470 kg Dozerblade: Down	5 m	kg											*1 310	*1 310	3.8 m
	4 m	kg							*1 420	1 310			*1 100	980	4.7 m
	3 m	kg							*1 510	1 280	*1 450	890	*1 020	810	5.3 m
	2 m	kg					*2 290	1 900	*1 770	1 220	*1 530	860	*1 020	730	5.0 m
	1 m	kg					*3 010	1 750	*2 060	1 160	*1 630	830	*1 060	700	5.6 m
	0 m	kg			*1 520	*1 520	*3 310	1 660	*2 230	1 100	*1 680	810	*1 170	710	5.0 m
	-1 m	kg	*2 080	*2 080	*2 900	*2 900	*3 160	1 630	*2 170	1 080	*1 520	800	*1 400	790	5.1 m
	-2 m	kg	*3 430	*3 430	*4 030	3 230	*2 590	1 650	*1 730	1 090			*1 390	970	4.4 m
	-3 m	kg			*1 820	*1 820	*1 120	*1 120					*1 000	*1 000	3.1 m
Boom : 3.0 m Arm : 1.9 m GP Shoe : 500 mm Steel track CWT : 470 kg Dozerblade: Up	5 m	kg											*1 310	*1 310	3.8 m
	4 m	kg							*1 420	1 280			*1 100	960	4.7 m
	3 m	kg							*1 510	1 260	1 120	870	*1 020	790	5.3 m
	2 m	kg					*2 290	1 870	1 560	1 200	1 100	850	930	710	5.0 m
	1 m	kg					2 280	1 710	1 490	1 130	1 070	820	900	680	5.6 m
	0 m	kg			*1 520	*1 520	2 190	1 620	1 430	1 080	1 040	790	920	700	5.0 m
	-1 m	kg	*2 080	*2 080	*2 900	*2 900	2 160	1 590	1 410	1 060	1 040	780	1 020	770	5.1 m
	-2 m	kg	*3 430	*3 430	*4 030	3 140	2 180	1 610	1 420	1 070			1 260	950	4.4 m
	-3 m	kg			*1 820	*1 820	*1 120	*1 120					*1 000	*1 000	3.1 m
Boom : 3.0 m Arm : 1.9 m GP Shoe : 400 mm Rubber pad CWT : 470 kg Dozerblade: Down	5 m	kg											*1 310	*1 310	3.8 m
	4 m	kg							*1 420	1 300			*1 100	970	4.7 m
	3 m	kg							*1 510	1 270	*1 450	880	*1 020	800	5.3 m
	2 m	kg					*2 290	1 890	*1 770	1 210	*1 530	860	*1 020	720	5.0 m
	1 m	kg					*3 010	1 730	*2 060	1 150	*1 630	830	*1 060	690	5.6 m
	0 m	kg			*1 520	*1 520	*3 310	1 640	*2 230	1 100	*1 680	800	*1 170	710	5.0 m
	-1 m	kg	*2 080	*2 080	*2 900	*2 900	*3 160	1 610	*2 170	1 070	*1 520	790	*1 400	780	5.1 m
	-2 m	kg	*3 430	*3 430	*4 030	3 180	*2 590	1 630	*1 730	1 080			*1 390	970	4.4 m
	-3 m	kg			*1 820	*1 820	*1 120	*1 120					*1 000	*1 000	3.1 m
Boom : 3.0 m Arm : 1.9 m GP Shoe : 400 mm Rubber pad CWT : 470 kg Dozerblade: Up	5 m	kg											*1 310	*1 310	3.8 m
	4 m	kg							*1 420	1 300			*1 100	970	4.7 m
	3 m	kg							*1 510	1 270	1 140	880	*1 020	800	5.3 m
	2 m	kg					*2 290	1 890	1 570	1 210	1 110	860	940	720	5.0 m
	1 m	kg					2 310	1 730	1 500	1 150	1 080	830	910	690	5.6 m
	0 m	kg			*1 520	*1 520	2 210	1 640	1 450	1 100	1 060	800	930	710	5.0 m
	-1 m	kg	*2 080	*2 080	*2 900	*2 900	2 180	1 610	1 430	1 070	1 050	790	1 030	780	5.1 m
	-2 m	kg	*3 430	*3 430	*4 030	3 180	2 200	1 630	1 440	1 080			1 280	970	4.4 m
	-3 m	kg			*1 820	*1 820	*1 120	*1 120					*1 000	*1 000	3.1 m

Notes: 1. The above loads are in compliance with SAE J1097 and ISO 10567 Hydraulic Excavator Lifting Capacity Standards. 2. Rated loads do not exceed 87% of hydraulic lifting capacity or 75% of tipping load. 3. Rated loads marked with an asterisk (*) are limited by hydraulic capacity rather than tipping load.

Equipment

STANDARD AND OPTIONAL EQUIPMENT	
• = Standard / o = Optional	
Engine	
Low-emission Volvo Stage V diesel engine	•
Two-stage air filter	•
Electric engine shutoff	•
Fuel filter and water separator	•
Alternator, 90 A	•
Water separator with heater	o
Block heater	o
Electric/Electronic control system	
Safe engine start function	•
Automatic idling system	•
LED working lights;	•
Cab-mounted 2 (Front), Boom-mounted 1(LH)	•
Extra working lights;	o
Cab-mounted 1 (Rear)	o
Boom-mounted 1(RH)	o
Travel alarm	•
Travel alarm white noise	o
Master electrical disconnect switch	•
Rear view camera	•
Side view camera	o
Battery, 12 V / 100 Ah	•
Start motor, 12 V / 2.5 kW	•
Fuel filler pump: 35 l/min, with automatic shut-off	o
Caretrack	o
Air compressor	o
Rotating warning beacon	o
Hydraulic system	
Automatic two speed travel motors	•
Hammer & shear hydraulic piping	•
Hydraulic piping:	o
Slope & rotator	o
Grapple	o
Quick coupler	o
Hose rupture valve for boom	o
Cylinder cushioning	•
Pilot control change	•
Overload warning device	o
Hydraulic fluid mineral 46	•
Hydraulic oil, ISO VG 32, 68	o
Hydraulic oil, biodegradable 46	o
Hydraulic oil, longlife oil 32, 46, 68	o

STANDARD AND OPTIONAL EQUIPMENT	
• = Standard / o = Optional	
Cab and interior	
Canopy	•
ROPS cab with caretrack	o
Adjustable fabric operator seat with suspension	•
PVC operator seat with suspension	o
Delux seat (Fabric, PVC)	o
Seat belt, 2 inch retractable	•
Seat belt, 3 inch retractable	o
Control joystick	•
AM/FM stereo	•
AM/FM stereo with USB input and Bluetooth	o
Master key	•
Hour meter (non analog)	•
Heater and air-conditioner	o
Cab mounted FOG (Falling Object Guard)	o
FOPS (Falling Object Protection Structure)	o
Safety net	o
Frame	
470 kg counterweight	•
Under cover	•
Dozer blade	•
Dozer blade with floating function	o
Undercarriage	
Greased and sealed track link	•
380 mm steel track	•
500 mm steel track	o
400 mm rubber track	o
400 mm rubber pad	o
Digging equipment	
Boom: 3.0 m, Arm: 1.6 m	•
Arm: 1.9 m long	o
Linkage with lifting eye	•
Linkage	o
Service	
Tool kit-daily maintenance	•
Tool kit, full scale	o
Spare parts	o

Not all products are available in all markets. Under our policy of continuous improvement, we reserve the right to change specifications and design without prior notice.
The illustrations do not necessarily show the standard version of the machine.

VOLVO
EC65

VOLVO

Ref. No 20066794_C / English-21 / 2026.07 / CEX / Volvo, Global Marketing