Volvo Excavators 23.4-29.0 t 175 hp

# ECR255

## PRELIMINARY

Volvo Construction Equipment

# ECR255

**Get more from your short swing radius excavator in the ECR255. More fuel efficiency, more lifting capacity and more operator comfort.**

## Outstanding visibility

- The newly designed cab significantly improves right hand, front and side visibility
- Optional one-piece windshield
- Large mirrors with electric heating
- Additional lighting on the cab, boom, and arm

## A new level of performance

- 7% increase in lifting capacity
- Heavier counterweight
- Boom/Swing priority functions
- Auto travel boost
- Floating dozer blade

# A new level in short swing performance

Get ready for a new standard in short swing radius excavator efficiency, performance and comfort in the ECR255. With 10% more fuel efficiency, 7% more lifting capacity and 20% more in-cab space compared to traditional short swing machines, count on the ECR255 to deliver the big performance and big results in short swing applications.

## 10% more fuel efficiency

- Advanced electro-hydraulic control system with main control valve (MCV)
- Redesigned main control valve for faster hydraulic movements and more efficient use of power
- New electric fan
- Engine pump optimization reduces engine speed to 1 600 rpm (1 800 rpm used for travel operation only when needed)
- Auto power boost
- Powerful and efficient Volvo engine
- New engine work modes
- Auto idling, automatic engine shutdown

## Made for uptime

- 1 000-hour engine oil change interval
- 3 000-hour hydraulic oil change
- More synchronized service intervals (all 1 000-hour multiples)
- Grouped filters and lubrication points easily accessed thanks to new right hand service access to the upper platform
- Urea tank filling from the ground level
- HVAC main filter replaced from inside the cab
- Easier, cleaner oil and filter changes: quick drain port, shut off valve, optional ground level access oil sampling port
- CareTrack telematics

## Smart View with POC (People and Obstacle Classification)

- Combine 360° camera view with highly intelligent radar detection
- Differentiate between people and objects thanks to deep learning technology
- Enhanced real-time view of surroundings
- Automatic alerts if people or obstacles are detected

## Unrivalled operator environment

- 20% more in-cab space
- 50% improved in-cab cooling performance
- Electric fans for less noise
- Two filter system for better air quality: pre filter and main filter
- Bluetooth connectivity, wireless phone charging and extensive storage
- Ergonomically designed footsteps and handrails for easy cab entrance/exit
- The tiltable left console provides more space to enter the cab
- Precision joystick system, ergonomic right-hand switch layout, customizable settings

## Dig Assist for faster, easier and safer digging operations

- Powered by the in-cab Volvo Co-Pilot
- Volvo Active Control for faster, more precise digging
- Boundary limits: Depth Limit, Height Limit, Swing Fence
- 2D/3D machine control, In-Field Design and On-Board Weighing

## Co-Pilot

The new Volvo Co-Pilot features a new 12.8” display with full HD resolution. Associated with the new HD side and rear camera, it gives better visibility on your operations. Both hardware and software improvements provide increased control on the Dig Assist applications.

## Smooth Control

You will find the new joystick controls offer smoother, easier operation. Because the controls are more precise, it is easier for you to achieve what you are trying to do, leading to better machine performance.

## Volvo Smart View

Volvo Smart View with Obstacle Detection provides operators with a 360° view of the machines surroundings thanks to the camera and the new radar detection system. This high technology can identify obstacles as either an object or a human being, allowing the operator to take appropriate action.

## Stay connected

In the comfort of the new cab, you can charge your mobile phone wirelessly or plugged in. You also have the option to use USB connections to access your music playlists or podcasts. The Bluetooth speaker enables you to have clear communication when making a phone call.

## Comfort

The new style cab's ambition is to being more comfortable and make your work easier. A handy storage space allows you to store your coolbox or shoes while you work. You will enjoy reduced noise levels, built-in sunscreen and improved HVAC. Moreover, the new comfortable seat offer will allow to reduce the operator fatigue when working all day.

## Industry leading service intervals

The ECR255 boasts some of the longest service intervals in the industry, with 1 000-hour engine oil, 3 000-hour hydraulic oil changes to mention a few. More synchronized service intervals (all 1 000-hour multiples) further increase uptime and reduce costs.

## Unrivalled operator comfort

The ECR255 combines a short swing radius machine with conventional machine cab, resulting in an outstanding 20% more in-cab space compared to a traditional short swing radius cab. This is complemented by a host of features designed to boost operator comfort including 50% improved in-cab cooling performance, less noise, Bluetooth connectivity, wireless phone charging and extensive storage.

## 10% more fuel efficiency

The ECR255 boasts all the power of its equivalent Volvo crawler excavator along with a 10% improvement in fuel efficiency. The ECR255 takes fuel efficiency to a new level with the redesigned main control valve which enables faster hydraulic movements and more efficient use of power, boosting overall machine performance. Additional features such as new electric fan, engine pump optimisation, auto power boost, and many other intelligent functions, combine to result in lower fuel consumption and lower operating costs.

## A new level of performance

Take short swing performance to the next level. The new machine design, including heavier counterweight, unlocks a new level of performance, most notably a 7% increase in lifting capacity. This is combined with the electro-hydraulic control system with redesigned main control valve and customized priority setting function, which enables fast cycle times and optimum efficiency out in the field. Additional functions such as auto power boost and auto travel boost further support productivity and enhance operator comfort.

# Volvo ECR255 in detail

## Engine

The latest generation, Volvo engine Stage V emissions compliant diesel engine fully meets the demands of the latest, emsissions regulations. Featuring Volvo Advanced Combustion Technology (V-ACT), it is designed to deliver superior performance and fuel efficiency. The engine uses precise, high pressure fuel injectors, turbo charger and air-to-air intercooler, and electronic engine controls to optimize machine performance.
**- Air Filter:** 3-stage with precleaner
**- Automatic Idling System:** Reduces engine speed to idle when the levers and pedals are not activated resulting in less fuel consumption and low cab noise levels.

| Engine | Brand | Volvo D6L |
|---|---|---|
| Max power at | rpm | 1,800 |
| Net, ISO 9249/SAE J1349 | kW | 128 |
| | hp | 174 |
| Gross, ISO 14396/SAE J1995 | kW | 129 |
| | hp | 175 |
| Max torque | Nm | 849 |
| at engine speed | rpm | 1,350 |
| No. of cylinders | | 6 |
| Displacement | lit | 5.7 |
| Bore | mm | 98 |
| Stroke | mm | 126 |

## Electrical System

High-capacity electrical system that is well protected. Waterproof double-lock harness plugs are used to secure corrosion-free connections. The main relays and solenoid valves are shielded to prevent damage. Contronics provides advanced monitoring of machine functions and important diagnostic information.

| | | |
|---|---|---|
| Voltage | V | 24 |
| Batteries | V | 2 x 12 |
| Battery capacity | Ah | 140 |
| Alternator | V/A | 28/180 |
| Start motor | V - kW | 24 - 5.5 |

## Undercarriage

The undercarriage has a robust X-shaped frame. Greased and sealed track chains are standard.

| | | |
|---|---|---|
| Track shoe | | 2 x 49 |
| Link pitch | mm | 190 |
| Shoe width, triple grouser | mm | 600 / 700 / 800 / 900 |
| Shoe width, triple grouser (HD) | mm | 600 |
| Shoe width, double grouser | mm | 700 |
| Shoe width, single grouser | mm | 600 |
| Bottom rollers | | 2 x 8 |
| Top rollers | | 2 x 2 |

## Swing System

The swing system uses an axial piston motors, driving a planetary gearbox for maximum torque. An automatic holding brake and antirebound valve are standard.

| | | |
|---|---|---|
| Max. slew speed | rpm | 12 |
| Max. slew torque | kN/m | 83.1 |

## Travel System

Each track is powered by an automatic two-speed shift travel motor. The track brakes are multi-disc, spring-applied and hydraulic released. The travel motor, brake and planetary gears are well protected within the track frame.

| | | |
|---|---|---|
| Max. drawbar pull | kN | 209 |
| Max. travel speed (low) | km/h | 3.4 |
| Max. travel speed (high) | km/h | 5.6 |
| Gradeability | ° | 35 |

## Cab

The operator's cab has easy access via a wide door opening. The cab is supported on hydraulic dampening mounts to reduce shock and vibration levels. These along with sound absorbing lining provide low noise levels. The cab has excellent all-round visibility. The front windshield can easily slide up into the ceiling, and the lower front glass can be removed and stored in the side door.
**Integrated air-conditioning and heating system:** The pressurized and filtered cab air is supplied by an automaticallycontrolled fan. The air is distributed throughout the cab from 10 vents.
**Ergonomic operator's seat:** The adjustable seat and joystick console move independently to accommodate the operator. The seat has 12 different adjustments plus a seat belt for the operator's comfort and safety.

| Sound Level | | |
|---|---|---|
| Sound level in cab according to ISO 6396 | | |
| $L_{pA}$ | dB | 70 |
| External sound level according to ISO 6395 and EU Noise Directive 2000/14/EC | | |
| $L_{WA}$ | dB | 100 |

**Hydraulic System**

The new electro-hydraulic system and new MCV (main control valve) use intelligent technology to control on-demand flow for highproductivity, high-digging capacity and excellent fuel consumption.
The following important functions are included in the system:
**Summation system:** Combines the flow of both hydraulic pumps to ensure quick cycle times and high productivity.
**Boom priority:** Gives priority to the boom operation for faster raising when loading or performing deep excavations.
**Arm priority:** Gives priority to the arm operation for faster cycle times in leveling and for increased bucket filling when digging.
**Swing priority:** Gives priority to swing functions for faster simultaneous operations.
**Regeneration system:** Prevents cavitation and provides flow to other movements during simultaneous operations for maximum productivity.
**Power boost:** All digging and lifting forces are increased.
**Auto warm up:** Hydraulic oil temprature can be set below the threshold that has been set.
**Creep mode:** Lower travel speed(10%~50% of 1st full speed) can be set by creep switch on.
**Holding valves:** Boom and arm holding valves prevent the digging equipment from creeping.

| **Main pump: 2 x Variable displacement axial piston pumps** | | |
|---|---|---|
| Maximum flow | l/min | 2 x 208 |
| **Pilot pump: Gear pump** | | |
| Maximum flow | l/min | 1 x 16 |
| **Max. pressure** | | |
| Implement | MPa | 34.3 |
| Travel circuit | MPa | 34.3 |
| Slew circuit | MPa | 29.5 |
| Pilot circuit | MPa | 3.9 |

| Hydraulic Cylinders | | |
|---|---|---|
| Boom | | 2 |
| Bore x Stroke | ø x mm | 130 x 1 420 |
| 2 piece boom | | 1 |
| Bore x Stroke | ø x mm | 160 x 1 070 |
| 1st boom of 2-piece boom | | 2 |
| Bore x Stroke | ø x mm | 130 x 1 345 |
| Arm | | 1 |
| Bore x Stroke | ø x mm | 135 x 1 485 |
| Bucket | | 1 |
| Bore x Stroke | ø x mm | 120 x 1 065 |
| Dozer blade | | 2 |
| Bore x Stroke | ø x mm | 140 x 320 |

| Service Refill | | |
|---|---|---|
| Fuel tank | lit | 299 |
| DEF/AdBlue® tank | lit | 27 |
| Hydraulic system, total | lit | 280 |
| Hydraulic tank | lit | 126 |
| Engine oil | lit | 25 |
| Engine coolant | lit | 32 |
| Slew reduction unit | lit | 4 |
| Travel reduction unit | lit | 2 x 5 |

# Specifications

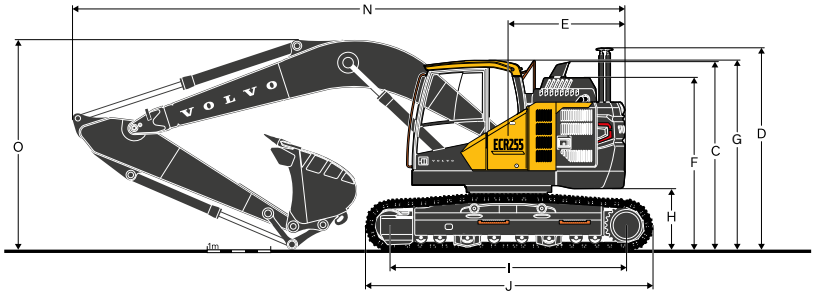


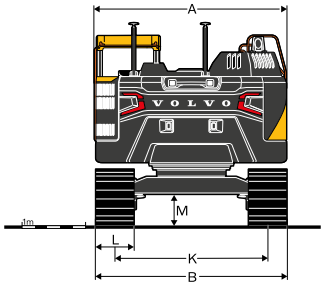


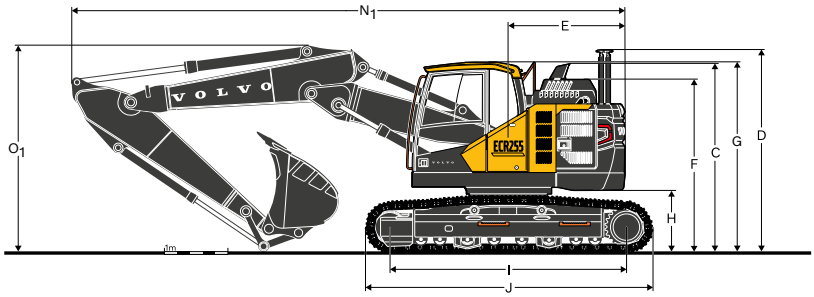


| DIMENSIONS | | | | | |
|---|---|---|---|---|---|
| **Description** | **Unit** | **ECR255 L** | | **ECR255 HW** | |
| **Boom** | | **5.7 m mono boom or 5.76 m 2-piece boom** | | | |
| **Arm** | **m** | **2.5** | **2.9** | **2.5** | **2.9** |
| A. Overall width of upper structure | mm | 3 010 | | 3 010 | |
| B. Overall width | mm | 2 990 | | 3 220 | |
| C. Overall height of cab | mm | 3 010 | | 3 180 | |
| D. Overall height of handrail | mm | 3 000 | | 3 170 | |
| E. Tail swing radius | mm | 2 370 | | 2 375 | |
| F. Overall height of engine hood | mm | 2 745 | | 2 915 | |
| H. Counterweight clearance * | mm | 1 005 | | 1 175 | |
| I. Tumbler length | mm | 3 660 | | 3 850 | |
| J. Track length | mm | 4 455 | | 4 470 | |
| K. Track gauge | mm | 2 390 | | 2 620 | |
| L. Shoe width | mm | 600 | | 600 | |
| M. Min. ground clearance * | mm | 515 | | 665 | |
| N. Overall length | mm | 9 065 | 9 035 | 9 075 | **9 035** |
| N'. Overall length | mm | 9 055 | 9 025 | 9 085 | **9 055** |
| O. Overall height of boom | mm | 3 330 | 3 310 | 3 410 | **3 365** |
| O'. Overall height of boom * | mm | 3 160 | 3 210 | 3 210 | **3 250** |

' 2 piece boom
* Without shoe grouser

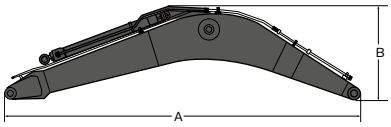


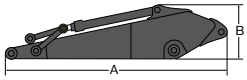


**DIMENSIONS**

| | | Boom | | | | Arm | |
|---|---|---|---|---|---|---|---|
| **Description** | **Unit** | **5.7 m GP** | **5.57 m 2-piece boom** | **Description** | **Unit** | **2.5 m HD** | **2.9 m GP** |
| A. Length | mm | 5 910 | 5 965 | A. Length | mm | 3 525 | 3 910 |
| B. Height | mm | 1 770 | 1 300 | B. Height | mm | 860 | 860 |
| Width | mm | 670 | 670 | Width | mm | 440 | 440 |
| Weight | kg | 2 000 | 2 570 | Weight | kg | 975 | 1 000 |

Includes cylinder, piping and pin, excludes boom cyl. Pin

Includes cylinder, linkage and pin

| **ECR255** | | |
|---|---|---|
| A. Height | mm | 620 |
| B. Lift height | mm | 550 |
| C. Digging depth | mm | 570 |
| **Width Blade** | | |
| with 600 mm shoe | mm | 2 990 |
| with 700 mm shoe | mm | 3 090 |
| with 800 mm shoe | mm | 3 190 |
| Weight | kg | 790 |

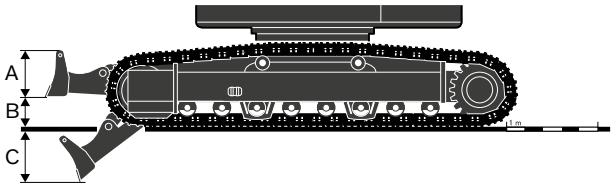

# Specifications

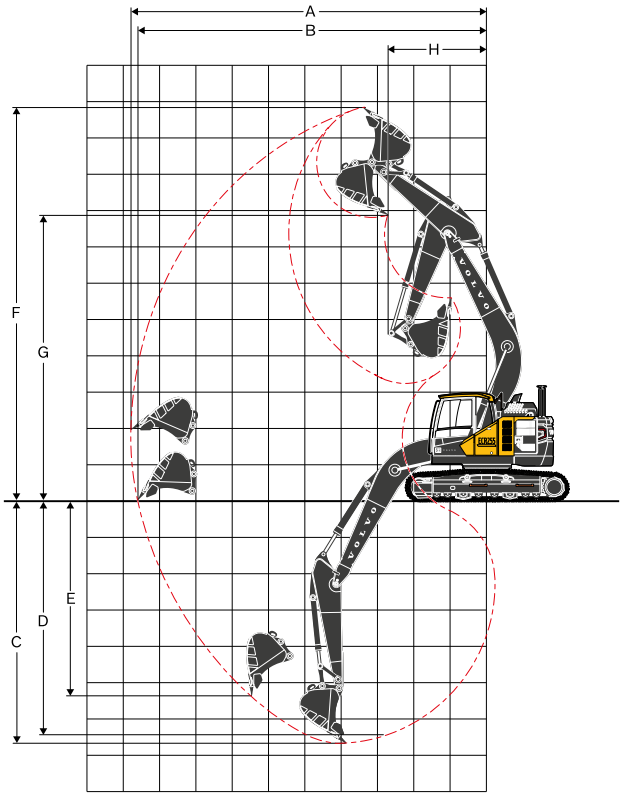


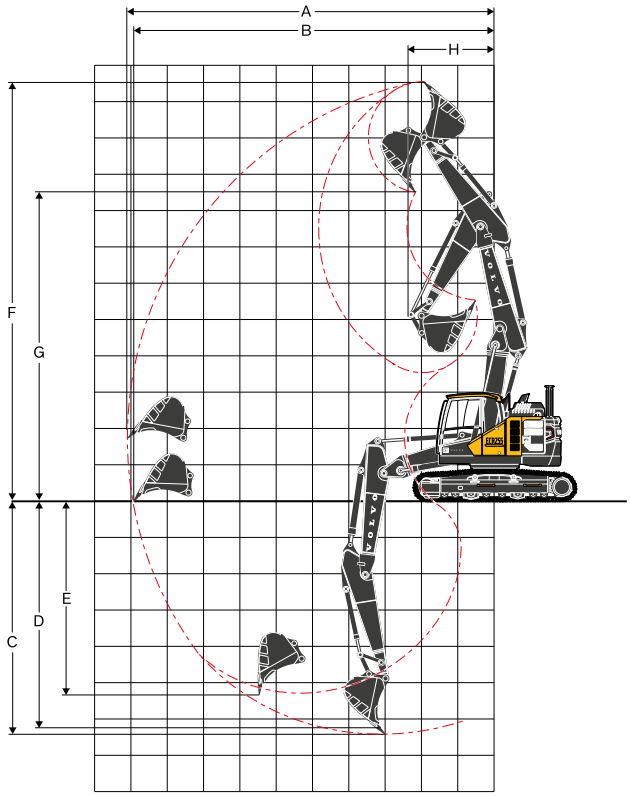


| WORKING RANGES | | | | | | | |
|---|---|---|---|---|---|---|---|
| **Description** | | | **Unit** | **ECR255** | | | |
| **Boom** | | | | **5.7 m mono boom** | | **5.57 m 2-piece boom** | |
| **Arm** | | | **m** | **2.5** | **2.9** | **2.5** | **2.9** |
| A. Max. digging reach | | | mm | 9 510 | 9 890 | 9 690 | 10 085 |
| B. Max. digging reach on ground | | | mm | 9 340 | 9 735 | 9 660 | 9 930 |
| C. Max. digging depth | | | mm | 6 350 | 6 755 | 5 950 | 6 355 |
| D. Max.digging depth (l=2 440 m level) | | | mm | 6 120 | 6 550 | 5 840 | 6 250 |
| E. Max. vertical wall digging depth | | | mm | 5 220 | 5 685 | 4 910 | 5 325 |
| F. Max. cutting height | | | mm | 10 600 | 10 915 | 11 150 | 11 515 |
| G. Max. dumping height | | | mm | 7 560 | 7 870 | 8 095 | 8 460 |
| H. Min. front swing radius | | | mm | 2 395 | 2 170 | 2 235 | 2 160 |
| **DIGGING FORCES WITH DIRECT FIT BUCKET** | | | | | | | |
| Bucket radius | | | mm | 1 528 | 1 528 | 1 528 | 1 528 |
| Breakout force (bucket) | Normal | SAE J1179 | kN | 125 | 125 | 125 | 125 |
| | Power boost | SAE J1179 | kN | 132 | 132 | 132 | 132 |
| | Normal | ISO 6015 | kN | 141 | 141 | 141 | 141 |
| | Power boost | ISO 6015 | kN | 149 | 149 | 149 | 149 |
| Tearout force (arm) | Normal | SAE J1179 | kN | 117 | 101 | 117 | 101 |
| | Power boost | SAE J1179 | kN | 124 | 107 | 124 | 107 |
| | Normal | ISO 6015 | kN | 121 | 104 | 121 | 104 |
| | Power boost | ISO 6015 | kN | 128 | 110 | 128 | 110 |
| Rotation angle, bucket | | | ° | 175 | 175 | 175 | 175 |

| MACHINE WEIGHTS AND GROUND PRESSURE - ECR255 L without Dozer blade | | | | | | | |
|---|---|---|---|---|---|---|---|
| **Description** | **Shoe width** | **Operating weight** | **Ground pressure** | **Overall width** | **Operating weight** | **Ground pressure** | **Overall width** |
| | **mm** | **kg** | **kPa** | **mm** | **kg** | **kPa** | **mm** |
| Triple grouser | 600 | 24 270 | 50.0 | 2 990 | 25 170 | 52.0 | 2 990 |
| | 600 (HD) | 24 365 | 51.0 | 2 990 | 25 265 | 52.0 | 2 990 |
| | 700 | 24 645 | 44.1 | 3 090 | 25 545 | 45.1 | 3 090 |
| | 800 | 24 925 | 39.2 | 3 190 | 25 825 | 40.2 | 3 190 |
| | 900 | 25 090 | 34.3 | 3 290 | 25 990 | 36.3 | 3 290 |
| Rubber grouser | 600 | 24 540 | 51.0 | 2 990 | 25 440 | 53.0 | 2 990 |
| Add on rubber grouser | 600 | 25 095 | 52.0 | 2 990 | 25 995 | 53.9 | 2 990 |
| Double grouser | 700 | 24 950 | 44.1 | 3 090 | 25 850 | 46.1 | 3 090 |
| | | **5.7 m GP mono boom, 2.9 m GP arm, 1.09 m³ bucket, 6 200 kg counterweight** | | | **5.7 m GP mono boom, 2.9 m GP arm, 1.09 m³ bucket, 7 100 kg counterweight** | | |
| Triple grouser | 600 | 24 285 | 50.0 | 2 990 | 25 185 | 52.0 | 2 990 |
| | 600 (HD) | 24 380 | 51.0 | 2 990 | 25 280 | 52.0 | 2 990 |
| | 700 | 24 660 | 44.1 | 3 090 | 25 560 | 45.1 | 3 090 |
| | 800 | 24 940 | 39.2 | 3 190 | 25 840 | 40.2 | 3 190 |
| | 900 | 25 105 | 34.3 | 3 290 | 26 005 | 36.3 | 3 290 |
| Rubber grouser | 600 | 24 555 | 51.0 | 2 990 | 25 455 | 53.0 | 2 990 |
| Add on rubber grouser | 600 | 25 110 | 52.0 | 2 990 | 26 010 | 53.9 | 2 990 |
| Double grouser | 700 | 24 965 | 44.1 | 3 090 | 25 865 | 46.1 | 3 090 |
| | | **5.7 m GP mono boom, 2.5 m HD arm, 1.09 m³ bucket, 6 200 kg counterweight** | | | **5.7 m GP mono boom, 2.5 m HD arm, 1.09 m³ bucket, 7 100 kg counterweight** | | |
| Triple grouser | 600 | 25 100 | 52.0 | 2 990 | 26 000 | 53.9 | 2 990 |
| | 600 (HD) | 25 195 | 52.0 | 2 990 | 26 095 | 53.9 | 2 990 |
| | 700 | 25 470 | 45.1 | 3 090 | 26 370 | 47.1 | 3 090 |
| | 800 | 25 750 | 40.2 | 3 190 | 26 650 | 41.2 | 3 190 |
| | 900 | 25 920 | 36.3 | 3 290 | 26 820 | 37.3 | 3 290 |
| Rubber grouser | 600 | 25 370 | 53.0 | 2 990 | 26 270 | 54.9 | 2 990 |
| Add on rubber grouser | 600 | 25 920 | 53.9 | 2 990 | 26 820 | 55.9 | 2 990 |
| Double grouser | 700 | 25 775 | 46.1 | 3 090 | 26 675 | 47.1 | 3 090 |
| | | **5.76 m 2-pieces boom, 2.9 m GP arm, 1.09 m³ bucket, 6 200 kg counterweight** | | | **5.76 m 2-pieces boom, 2.9 m GP arm, 1.09 m³ bucket, 7 100 kg counterweight** | | |
| Triple grouser | 600 | 25 085 | 52.0 | 2 990 | 25 985 | 53.9 | 2 990 |
| | 600 (HD) | 25 180 | 52.0 | 2 990 | 26 080 | 53.9 | 2 990 |
| | 700 | 25 455 | 45.1 | 3 090 | 26 355 | 47.1 | 3 090 |
| | 800 | 25 735 | 40.2 | 3 190 | 26 635 | 41.2 | 3 190 |
| | 900 | 25 905 | 36.3 | 3 290 | 26 805 | 37.3 | 3 290 |
| Rubber grouser | 600 | 25 355 | 53.0 | 2 990 | 26 255 | 54.9 | 2 990 |
| Add on rubber grouser | 600 | 25 905 | 53.9 | 2 990 | 26 805 | 55.9 | 2 990 |
| Double grouser | 700 | 25 760 | 46.1 | 3 090 | 26 660 | 47.1 | 3 090 |
| | | **5.76 m 2-pieces boom, 2.5 m GP arm, 1.09 m³ bucket, 6 200 kg counterweight** | | | **5.76 m 2-pieces boom, 2.5 m GP arm, 1.09 m³ bucket, 7 100 kg counterweight** | | |

# Specifications

| MACHINE WEIGHTS AND GROUND PRESSURE - ECR255 L with Dozer blade | | | | | | | |
|---|---|---|---|---|---|---|---|
| **Description** | **Shoe width** | **Operating weight** | **Ground pressure** | **Overall width** | **Operating weight** | **Ground pressure** | **Overall width** |
| | **mm** | **kg** | **kPa** | **mm** | **kg** | **kPa** | **mm** |
| Triple grouser | 600 | 25 660 | 53.0 | 2 990 | 26 560 | 54.9 | 2 990 |
| | 600 (HD) | 25 755 | 53.0 | 2 990 | 26 655 | 54.9 | 2 990 |
| | 700 | 26 065 | 46.1 | 3 090 | 26 965 | 48.0 | 3 090 |
| | 800 | 26 340 | 41.2 | 3 190 | 27 240 | 42.2 | 3 190 |
| Rubber grouser | 600 | 25 930 | 53.9 | 2 990 | 26 830 | 55.9 | 2 990 |
| Add on rubber grouser | 600 | 26 480 | 54.9 | 2 990 | 27 380 | 56.9 | 2 990 |
| Double grouser | 700 | 26 370 | 47.1 | 3 090 | 27 265 | 48.0 | 3 090 |
| | | **5.7 m GP mono boom, 2.9 m GP arm, 1.09 m³ bucket, 6 200 kg counterweight** | | | **5.7 m GP mono boom, 2.9 m GP arm, 1.09 m³ bucket, 7 100 kg counterweight** | | |
| Triple grouser | 600 | 25 645 | 53.0 | 2 990 | 26 545 | 54.9 | 2 990 |
| | 600 (HD) | 25 740 | 53.0 | 2 990 | 26 640 | 54.9 | 2 990 |
| | 700 | 26 050 | 46.1 | 3 090 | 26 950 | 48.0 | 3 090 |
| | 800 | 26 330 | 41.2 | 3 190 | 27 230 | 42.2 | 3 190 |
| Rubber grouser | 600 | 25 915 | 53.9 | 2 990 | 26 815 | 55.9 | 2 990 |
| Add on rubber grouser | 600 | 26 465 | 54.9 | 2 990 | 27 365 | 56.9 | 2 990 |
| Double grouser | 700 | 26 355 | 47.1 | 3 090 | 27 255 | 48.0 | 3 090 |
| | | **5.7 m GP mono boom, 2.5 m HD arm, 1.09 m³ bucket, 6 200 kg counterweight** | | | **5.7 m GP mono boom, 2.5 m HD arm, 1.09 m³ bucket, 7 100 kg counterweight** | | |
| Triple grouser | 600 | 26 490 | 54.9 | 2 990 | 27 390 | 56.9 | 2 990 |
| | 600 (HD) | 26 580 | 54.9 | 2 990 | 27 480 | 56.9 | 2 990 |
| | 700 | 26 890 | 48.0 | 3 090 | 27 790 | 49.0 | 3 090 |
| | 800 | 27 170 | 42.2 | 3 190 | 28 070 | 44.1 | 3 190 |
| Rubber grouser | 600 | 26 760 | 55.9 | 2 990 | 27 660 | 56.9 | 2 990 |
| Add on rubber grouser | 600 | 27 310 | 56.9 | 2 990 | 28 210 | 58.8 | 2 990 |
| Double grouser | 700 | 27 195 | 48.0 | 3 090 | 28 095 | 50.0 | 3 090 |
| | | **5.76 m 2-pieces boom, 2.9 m GP arm, 1.09 m³ bucket, 6 200 kg counterweight** | | | **5.76 m 2-pieces boom, 2.9 m GP arm, 1.09 m³ bucket, 7 100 kg counterweight** | | |
| Triple grouser | 600 | 26 475 | 54.9 | 2 990 | 27 375 | 56.9 | 2 990 |
| | 600 (HD) | 26 565 | 54.9 | 2 990 | 27 465 | 56.9 | 2 990 |
| | 700 | 26 875 | 48.0 | 3 090 | 27 775 | 49.0 | 3 090 |
| | 800 | 27 155 | 42.2 | 3 190 | 28 055 | 43.1 | 3 190 |
| Rubber grouser | 600 | 26 745 | 55.9 | 2 990 | 27 645 | 56.9 | 2 990 |
| Add on rubber grouser | 600 | 27 295 | 56.9 | 2 990 | 28 195 | 58.8 | 2 990 |
| Double grouser | 700 | 27 180 | 48.0 | 3 090 | 28 080 | 50.0 | 3 090 |
| | | **5.76 m 2-pieces boom, 2.5 m GP arm, 1.09 m³ bucket, 6 200 kg counterweight** | | | **5.76 m 2-pieces boom, 2.5 m GP arm, 1.09 m³ bucket, 7 100 kg counterweight** | | |

**BUCKET SELECTION GUIDE**

| Bucket type | | Capacity | Cutting width | Weight | Teeth | ECR255, 600 mm shoe, 6 200 kg counterweight | | | | ECR255, 700 mm shoe, 6 200 kg counterweight | | | |
|---|---|---|---|---|---|---|---|---|---|---|---|---|---|
| | | | | | | 5.7 m boom | | 5.76 m 2-piece boom | | 5.7 m boom | | 5.76 m 2-piece boom | |
| | | m³ | mm | kg | EA | 2.5 m arm | 2.9 m arm | 2.5 m arm | 2.9 m arm | 2.5 m arm | 2.9 m arm | 2.5 m arm | 2.9 m arm |
| Direct fit Buckets General purpose | Without Quick Coupler | 0.48 | 600 | 623 | 3 | C | C | C | C | C | C | C | C |
| | | 0.63 | 800 | 703 | 4 | C | C | C | C | C | C | C | C |
| | | 0.75 | 900 | 749 | 4 | C | C | C | C | C | C | C | C |
| | | 0.92 | 1 050 | 819 | 4 | C | C | C | C | C | C | C | C |
| | | 1.09 | 1 200 | 908 | 5 | C | C | C | C | C | C | C | C |
| | | 1.27 | 1 350 | 995 | 5 | C | C | C | B | C | C | C | C |
| | | 1.44 | 1 500 | 1 085 | 6 | C | B | B | B | C | B | B | B |
| | U type quick coupler | 0.48 | 600 | 623 | 3 | C | C | C | C | C | C | C | C |
| | | 0.63 | 800 | 703 | 4 | C | C | C | C | C | C | C | C |
| | | 0.75 | 900 | 749 | 4 | C | C | C | C | C | C | C | C |
| | | 0.92 | 1 050 | 819 | 4 | C | C | C | C | C | C | C | C |
| | | 1.09 | 1 200 | 908 | 5 | C | C | C | C | C | C | C | C |
| | | 1.27 | 1 350 | 995 | 5 | C | B | B | B | C | B | B | B |
| | | 1.44 | 1 500 | 1 085 | 6 | B | A | A | A | B | A | B | A |

Please consult with your Volvo dealer for the proper match of buckets and attachments to suit the application.
The recommendations are given as a guide only, based on typical operation conditions.
Bucket capacity based on ISO 7451, heaped material with a 1:1 angle of repose.

**Maximum materal density**

| | |
|---|---|
| A: 1 200~1 300 kg/m³ | Coal, Caliche, Shale |
| B: 1 400~1 600 kg/m³ | Wet earth and clay, Limestone, Sandstone |
| C: 1 700~1 800 kg/m³ | Granite, Wet sand, Well blasted rock |
| D: 1 900 kg/m³ ~ | Wet mud, Iron ore |

# Specifications

**LIFTING CAPACITY - ECR255 L**

At the arm end without bucket.
For Lifting capacity including bucket. Simply subtract actual weight of the direct fit bucket or the bucket with quick fit from the following values.

| | Lifting point | | 1.5 m | | 3 m | | 4.5 m | | 6.0 m | | 7.5 m | | Max. reach | | |
|---|---|---|---|---|---|---|---|---|---|---|---|---|---|---|---|
| | | | Along UC | Across UC | Along UC | Across UC | Along UC | Across UC | Along UC | Across UC | Along UC | Across UC | Along UC | Across UC | Max. m |
| Boom: 5.7mGP<br>Arm: 2.5m<br>Shoe: 600mm<br>CWT: 6200kg | 9 m | kg | | | *8 380 | *8 380 | | | | | | | *8 380 | *8 380 | 3.1 m |
| | 7.5 m | kg | | | | | *6 890 | *6 890 | | | | | *6 680 | 6 080 | 5.5 m |
| | 6 m | kg | | | | | *7 210 | *7 210 | *6 880 | 5 220 | | | *6 230 | 4 300 | 6.7 m |
| | 4.5 m | kg | | | | | *8 700 | 7 930 | *7 430 | 5 070 | | | 5 630 | 3 550 | 7.5 m |
| | 3 m | kg | | | | | *10 880 | 7 350 | 7 810 | 4 820 | 5 510 | 3 450 | 5 100 | 3 190 | 7.9 m |
| | 1.5 m | kg | | | | | 11 930 | 6 850 | 7 540 | 4 580 | 5 390 | 3 340 | 4 920 | 3 050 | 8.0 m |
| | 0 m | kg | | | | | 11 630 | 6 600 | 7 350 | 4 420 | 5 300 | 3 260 | 5 040 | 3 100 | 7.8 m |
| | -1.5 m | kg | | | *11 650 | *11 650 | 11 570 | 6 550 | 7 290 | 4 360 | | | 5 530 | 3 380 | 7.3 m |
| | -3.0 m | kg | | | *15 910 | 12 960 | 11 670 | 6 630 | 7 350 | 4 420 | | | 6 750 | 4 100 | 6.4 m |
| | -4.5 m | kg | | | *11 740 | *11 740 | *8 570 | 6 900 | | | | | *7 760 | 6 190 | 4.9 m |
| Boom: 5.7mGP<br>Arm: 2.9m<br>Shoe: 600mm<br>CWT: 6200kg | 9 m | kg | | | | | | | | | | | *5 830 | *5 830 | 4.0 m |
| | 7.5 m | kg | | | | | *6 150 | *6 150 | *4 920 | *4 920 | | | *4 830 | *4 830 | 6.0 m |
| | 6 m | kg | | | | | *6 530 | *6 530 | *6 380 | 5 290 | | | *4 530 | 3 890 | 7.2 m |
| | 4.5 m | kg | | | *10 230 | *10 230 | *8 010 | *8 010 | *7 000 | 5 120 | 5 650 | 3 570 | *4 490 | 3 270 | 7.9 m |
| | 3 m | kg | | | | | *10 230 | 7 470 | 7 860 | 4 860 | 5 530 | 3 460 | *4 650 | 2 960 | 8.3 m |
| | 1.5 m | kg | | | | | 12 020 | 6 920 | 7 570 | 4 600 | 5 390 | 3 330 | 4 580 | 2 830 | 8.4 m |
| | 0 m | kg | | | | | 11 640 | 6 610 | 7 350 | 4 410 | 5 280 | 3 230 | 4 670 | 2 870 | 8.2 m |
| | -1.5 m | kg | *6 750 | *6 750 | *10 980 | *10 980 | 11 520 | 6 510 | 7 250 | 4 320 | 5 240 | 3 200 | 5 060 | 3 090 | 7.7 m |
| | -3.0 m | kg | *11 760 | *11 760 | *17 000 | 12 790 | 11 580 | 6 550 | 7 270 | 4 350 | | | 6 020 | 3 660 | 6.8 m |
| | -4.5 m | kg | | | *13 310 | 13 160 | *9 670 | 6 760 | | | | | *7 590 | 5 120 | 5.5 m |
| Boom: 5.7mGP<br>Arm: 2.5m<br>Shoe: 600mm<br>CWT: 6200kg<br>Dozer blade down | 9 m | kg | | | *8 380 | *8 380 | | | | | | | *8 380 | *8 380 | 3.1 m |
| | 7.5 m | kg | | | | | *6 890 | *6 890 | | | | | *6 680 | *6 680 | 5.5 m |
| | 6 m | kg | | | | | *7 210 | *7 210 | *6 880 | 5 790 | | | *6 230 | 4 790 | 6.7 m |
| | 4.5 m | kg | | | | | *8 700 | *8 700 | *7 430 | 5 640 | | | *6 200 | 3 970 | 7.5 m |
| | 3 m | kg | | | | | *10 880 | 8 220 | *8 380 | 5 390 | *7 220 | 3 860 | *6 460 | 3 580 | 7.9 m |
| | 1.5 m | kg | | | | | *12 700 | 7 720 | *9 290 | 5 150 | *7 610 | 3 750 | *7 010 | 3 430 | 8.0 m |
| | 0 m | kg | | | | | *13 390 | 7 470 | *9 820 | 4 980 | *7 790 | 3 670 | *7 490 | 3 500 | 7.8 m |
| | -1.5 m | kg | | | *11 650 | *11 650 | *13 040 | 7 410 | *9 720 | 4 920 | | | *7 740 | 3 810 | 7.3 m |
| | -3.0 m | kg | | | *15 910 | 14 810 | *11 700 | 7 500 | *8 660 | 4 980 | | | *7 950 | 4 610 | 6.4 m |
| | -4.5 m | kg | | | *11 740 | *11 740 | *8 570 | 7 770 | | | | | *7 760 | 6 970 | 4.9 m |
| Boom: 5.7mGP<br>Arm: 2.9m<br>Shoe: 600mm<br>CWT: 6200kg<br>Dozer blade down | 9 m | kg | | | | | | | | | | | *5 830 | *5 830 | 4.0 m |
| | 7.5 m | kg | | | | | *6 150 | *6 150 | *4 920 | *4 920 | | | *4 830 | *4 830 | 6.0 m |
| | 6 m | kg | | | | | *6 530 | *6 530 | *6 380 | 5 860 | | | *4 530 | 4 330 | 7.2 m |
| | 4.5 m | kg | | | *10 230 | *10 230 | *8 010 | *8 010 | *7 000 | 5 690 | *6 170 | 3 990 | *4 490 | 3 660 | 7.9 m |
| | 3 m | kg | | | | | *10 230 | 8 350 | *8 000 | 5 430 | *6 940 | 3 880 | *4 650 | 3 320 | 8.3 m |
| | 1.5 m | kg | | | | | *12 250 | 7 790 | *9 020 | 5 170 | *7 410 | 3 750 | *4 990 | 3 190 | 8.4 m |
| | 0 m | kg | | | | | *13 250 | 7 470 | *9 680 | 4 970 | *7 720 | 3 650 | *5 610 | 3 240 | 8.2 m |
| | -1.5 m | kg | *6 750 | *6 750 | *10 980 | *10 980 | *13 190 | 7 370 | *9 770 | 4 880 | *7 580 | 3 610 | *6 740 | 3 500 | 7.7 m |
| | -3.0 m | kg | *11 760 | *11 760 | *17 000 | 14 640 | *12 150 | 7 420 | *9 040 | 4 910 | | | *7 560 | 4 120 | 6.8 m |
| | -4.5 m | kg | | | *13 310 | *13 310 | *9 670 | 7 620 | | | | | *7 590 | 5 770 | 5.5 m |

Notes: 1. Machine in “Fine Mode-F” (Power Boost) for lifting capacities.
2. The above loads are in compliance with SAE J1097 and ISO 10567 Hydraulic Excavator Lifting Capacity Standards.
3. Rated loads do not exceed 87% of hydraulic lifting capacity or 75% of tipping load.
4. Rated loads marked with an asterisk (*) are limited by hydraulic capacity rather than tipping load.

**LIFTING CAPACITY - ECR255 L**

At the arm end without bucket.
For Lifting capacity including bucket. Simply subtract actual weight of the direct fit bucket or the bucket with quick fit from the following values.

| | Lifting point | | 1.5 m | | 3 m | | 4.5 m | | 6.0 m | | 7.5 m | | Max. reach | | |
|---|---|---|---|---|---|---|---|---|---|---|---|---|---|---|---|
| | | | Along UC | Across UC | Along UC | Across UC | Along UC | Across UC | Along UC | Across UC | Along UC | Across UC | Along UC | Across UC | Max. m |
| Boom: 5.76m 2 piece boom | 9 m | kg | | | *9 840 | *9 840 | | | | | | | *8 670 | *8 670 | 3.6 m |
| | 7.5 m | kg | | | *8 290 | *8 290 | *8 730 | 8 410 | | | | | *6 830 | 5 530 | 5.7 m |
| | 6 m | kg | | | *7 680 | *7 680 | *8 800 | 8 270 | 8 240 | 5 150 | | | *6 280 | 4 000 | 6.9 m |
| | 4.5 m | kg | | | | | *11 340 | 7 820 | 8 050 | 4 980 | 5 580 | 3 470 | 5 370 | 3 330 | 7.7 m |
| Arm: 2.5m | 3 m | kg | | | | | 12 430 | 7 200 | 7 760 | 4 730 | 5 470 | 3 380 | 4 890 | 3 010 | 8.1 m |
| Shoe: 600mm | 1.5 m | kg | | | | | 11 830 | 6 690 | 7 480 | 4 490 | 5 360 | 3 270 | 4 730 | 2 890 | 8.1 m |
| CWT: 6200kg | 0 m | kg | | | | | 11 570 | 6 480 | 7 310 | 4 330 | 5 280 | 3 200 | 4 860 | 2 960 | 8.0 m |
| | -1.5 m | kg | | | *9 780 | *9 780 | *10 700 | 6 470 | 7 270 | 4 300 | | | 5 330 | 3 230 | 7.5 m |
| | -3.0 m | kg | | | | | *7 710 | 6 600 | *5 820 | 4 390 | | | | | 6.6 m |
| Boom: 5.76m 2 piece boom | 9 m | kg | | | *7 890 | *7 890 | | | | | | | *5 990 | *5 990 | 4.4 m |
| | 7.5 m | kg | | | | | *7 010 | *7 010 | *5 930 | 5 220 | | | *4 920 | 4 790 | 6.3 m |
| | 6 m | kg | | | *6 060 | *6 060 | *7 010 | *7 010 | *7 170 | 5 220 | | | *4 550 | 3 620 | 7.4 m |
| | 4.5 m | kg | | | *9 910 | *9 910 | *9 130 | 7 960 | 8 110 | 5 040 | 5 620 | 3 500 | *4 440 | 3 060 | 8.1 m |
| Arm: 2.9m | 3 m | kg | | | | | *12 360 | 7 320 | 7 810 | 4 770 | 5 490 | 3 390 | *4 520 | 2 780 | 8.5 m |
| Shoe: 600mm | 1.5 m | kg | | | | | 11 920 | 6 760 | 7 510 | 4 500 | 5 350 | 3 260 | 4 400 | 2 680 | 8.5 m |
| CWT: 6200kg | 0 m | kg | | | | | 11 570 | 6 480 | 7 300 | 4 320 | 5 250 | 3 170 | 4 500 | 2 730 | 8.4 m |
| | -1.5 m | kg | | | *9 410 | *9 410 | *11 330 | 6 410 | 7 230 | 4 250 | 5 230 | 3 150 | 4 880 | 2 960 | 7.9 m |
| | -3.0 m | kg | | | | | *8 660 | 6 510 | *6 620 | 4 310 | | | *4 660 | 3 490 | 7.1 m |
| Boom: 5.76m 2 piece boom | 9 m | kg | | | *9 840 | *9 840 | | | | | | | *8 670 | *8 670 | 3.6 m |
| | 7.5 m | kg | | | *8 290 | *8 290 | *8 730 | *8 730 | | | | | *6 830 | 6 150 | 5.7 m |
| | 6 m | kg | | | *7 680 | *7 680 | *8 800 | *8 800 | *8 660 | 5 730 | | | *6 280 | 4 470 | 6.9 m |
| Arm: 2.5m | 4.5 m | kg | | | | | *11 340 | 8 710 | *9 040 | 5 560 | *7 290 | 3 890 | *6 140 | 3 740 | 7.7 m |
| Shoe: 600mm | 3 m | kg | | | | | *12 760 | 8 080 | *9 570 | 5 300 | *7 760 | 3 800 | *6 280 | 3 390 | 8.1 m |
| CWT: 6200kg | 1.5 m | kg | | | | | *13 350 | 7 570 | *9 840 | 5 050 | *7 710 | 3 690 | *6 680 | 3 270 | 8.1 m |
| Dozer blade down | 0 m | kg | | | | | *12 570 | 7 350 | *9 490 | 4 900 | *7 210 | 3 620 | *6 450 | 3 340 | 8.0 m |
| | -1.5 m | kg | | | *9 780 | *9 780 | *10 700 | 7 340 | *8 290 | 4 860 | | | *5 810 | 3 660 | 7.5 m |
| | -3.0 m | kg | | | | | *7 710 | 7 480 | *5 820 | 4 960 | | | | | 6.6 m |
| Boom: 5.76m 2 piece boom | 9 m | kg | | | *7 890 | *7 890 | | | | | | | *5 990 | *5 990 | 4.4 m |
| | 7.5 m | kg | | | | | *7 010 | *7 010 | *5 930 | 5 800 | | | *4 920 | *4 920 | 6.3 m |
| | 6 m | kg | | | *6 060 | *6 060 | *7 010 | *7 010 | *7 170 | 5 800 | | | *4 550 | 4 050 | 7.4 m |
| Arm: 2.9m | 4.5 m | kg | | | *9 910 | *9 910 | *9 130 | 8 850 | *8 480 | 5 610 | *6 780 | 3 920 | *4 440 | 3 440 | 8.1 m |
| Shoe: 600mm | 3 m | kg | | | | | *12 360 | 8 210 | *9 360 | 5 340 | *7 660 | 3 810 | *4 520 | 3 140 | 8.5 m |
| CWT: 6200kg | 1.5 m | kg | | | | | *13 270 | 7 640 | *9 770 | 5 070 | *7 710 | 3 680 | *4 760 | 3 030 | 8.5 m |
| Dozer blade down | 0 m | kg | | | | | *12 890 | 7 350 | *9 610 | 4 890 | *7 400 | 3 590 | *5 240 | 3 090 | 8.4 m |
| | -1.5 m | kg | | | *9 410 | *9 410 | *11 330 | 7 280 | *8 660 | 4 820 | *6 370 | 3 570 | *5 610 | 3 350 | 7.9 m |
| | -3.0 m | kg | | | | | *8 660 | 7 380 | *6 620 | 4 870 | | | *4 660 | 3 940 | 7.1 m |

Notes: 1. Machine in “Fine Mode-F” (Power Boost) for lifting capacities.
2. The above loads are in compliance with SAE J1097 and ISO 10567 Hydraulic Excavator Lifting Capacity Standards.
3. Rated loads do not exceed 87% of hydraulic lifting capacity or 75% of tipping load.
4. Rated loads marked with an asterisk (*) are limited by hydraulic capacity rather than tipping load.

# Specifications

**LIFTING CAPACITY - ECR255 L**

At the arm end without bucket.
For Lifting capacity including bucket. Simply subtract actual weight of the direct fit bucket or the bucket with quick fit from the following values.

| | Lifting point | | 1.5 m | | 3 m | | 4.5 m | | 6.0 m | | 7.5 m | | Max. reach | | |
|---|---|---|---|---|---|---|---|---|---|---|---|---|---|---|---|
| | | | Along UC | Across UC | Along UC | Across UC | Along UC | Across UC | Along UC | Across UC | Along UC | Across UC | Along UC | Across UC | Max. m |
| Boom: 5.7 m GP<br>Arm: 2.5 m<br>Shoe: 700 mm<br>CWT: 6200 kg | 9 m | kg | | | *8 380 | *8 380 | | | | | | | *8 380 | *8 380 | 3.1 m |
| | 7.5 m | kg | | | | | *6 890 | *6 890 | | | | | *6 680 | 6 150 | 5.5 m |
| | 6 m | kg | | | | | *7 210 | *7 210 | *6 880 | 5 280 | | | *6 230 | 4 350 | 6.7 m |
| | 4.5 m | kg | | | | | *8 700 | 8 020 | *7 430 | 5 130 | | | 5 710 | 3 600 | 7.5 m |
| | 3 m | kg | | | | | *10 880 | 7 430 | 7 910 | 4 880 | 5 580 | 3 490 | 5 170 | 3 230 | 7.9 m |
| | 1.5 m | kg | | | | | 12 080 | 6 930 | 7 640 | 4 640 | 5 460 | 3 380 | 4 990 | 3 090 | 8.0 m |
| | 0 m | kg | | | | | 11 780 | 6 690 | 7 450 | 4 480 | 5 370 | 3 300 | 5 110 | 3 140 | 7.8 m |
| | -1.5 m | kg | | | *11 650 | *11 650 | 11 720 | 6 640 | 7 380 | 4 420 | | | 5 600 | 3 430 | 7.3 m |
| | -3.0 m | kg | | | *15 910 | 13 120 | *11 700 | 6 720 | 7 450 | 4 480 | | | 6 840 | 4 150 | 6.4 m |
| | -4.5 m | kg | | | *11 740 | *11 740 | *8 570 | 6 980 | | | | | *7 760 | 6 270 | 4.9 m |
| Boom: 5.7 m GP<br>Arm: 2.9 m<br>Shoe: 700 mm<br>CWT: 6200 kg | 9 m | kg | | | | | | | | | | | *5 830 | *5 830 | 4.0 m |
| | 7.5 m | kg | | | | | *6 150 | *6 150 | *4 920 | *4 920 | | | *4 830 | *4 830 | 6.0 m |
| | 6 m | kg | | | | | *6 530 | *6 530 | *6 380 | 5 350 | | | *4 530 | 3 940 | 7.2 m |
| | 4.5 m | kg | | | *10 230 | *10 230 | *8 010 | *8 010 | *7 000 | 5 180 | 5 720 | 3 610 | *4 490 | 3 310 | 7.9 m |
| | 3 m | kg | | | | | *10 230 | 7 550 | 7 960 | 4 920 | 5 600 | 3 500 | *4 650 | 3 000 | 8.3 m |
| | 1.5 m | kg | | | | | 12 170 | 7 000 | 7 660 | 4 660 | 5 460 | 3 380 | 4 640 | 2 870 | 8.4 m |
| | 0 m | kg | | | | | 11 800 | 6 690 | 7 450 | 4 470 | 5 350 | 3 280 | 4 730 | 2 910 | 8.2 m |
| | -1.5 m | kg | *6 750 | *6 750 | *10 980 | *10 980 | 11 680 | 6 590 | 7 350 | 4 380 | 5 310 | 3 240 | 5 130 | 3 140 | 7.7 m |
| | -3.0 m | kg | *11 760 | *11 760 | *17 000 | 12 950 | 11 730 | 6 640 | 7 370 | 4 400 | | | 6 100 | 3 710 | 6.8 m |
| | -4.5 m | kg | | | *13 310 | *13 310 | *9 670 | 6 840 | | | | | *7 590 | 5 190 | 5.5 m |
| Boom: 5.7 m GP<br>Arm: 2.5 m<br>Shoe: 700 mm<br>CWT: 6200 kg<br>Dozer blade down | 9 m | kg | | | *8 380 | *8 380 | | | | | | | *8 380 | *8 380 | 3.1 m |
| | 7.5 m | kg | | | | | *6 890 | *6 890 | | | | | *6 680 | *6 680 | 5.5 m |
| | 6 m | kg | | | | | *7 210 | *7 210 | *6 880 | 5 790 | | | *6 230 | 4 790 | 6.7 m |
| | 4.5 m | kg | | | | | *8 700 | *8 700 | *7 430 | 5 640 | | | *6 200 | 3 970 | 7.5 m |
| | 3 m | kg | | | | | *10 880 | 8 220 | *8 380 | 5 390 | *7 220 | 3 860 | *6 460 | 3 580 | 7.9 m |
| | 1.5 m | kg | | | | | *12 700 | 7 720 | *9 290 | 5 150 | *7 610 | 3 750 | *7 010 | 3 430 | 8.0 m |
| | 0 m | kg | | | | | *13 390 | 7 470 | *9 820 | 4 980 | *7 790 | 3 670 | *7 490 | 3 500 | 7.8 m |
| | -1.5 m | kg | | | *11 650 | *11 650 | *13 040 | 7 410 | *9 720 | 4 920 | | | *7 740 | 3 810 | 7.3 m |
| | -3.0 m | kg | | | *15 910 | 14 810 | *11 700 | 7 500 | *8 660 | 4 980 | | | *7 950 | 4 610 | 6.4 m |
| | -4.5 m | kg | | | *11 740 | *11 740 | *8 570 | 7 770 | | | | | *7 760 | 6 970 | 4.9 m |
| Boom: 5.7 m GP<br>Arm: 2.9 m<br>Shoe: 700 mm<br>CWT: 6200 kg<br>Dozer blade down | 9 m | kg | | | | | | | | | | | *5 830 | *5 830 | 4.0 m |
| | 7.5 m | kg | | | | | *6 150 | *6 150 | *4 920 | *4 920 | | | *4 830 | *4 830 | 6.0 m |
| | 6 m | kg | | | | | *6 530 | *6 530 | *6 380 | 5 920 | | | *4 530 | 4 380 | 7.2 m |
| | 4.5 m | kg | | | *10 230 | *10 230 | *8 010 | *8 010 | *7 000 | 5 750 | *6 170 | 4 030 | *4 490 | 3 700 | 7.9 m |
| | 3 m | kg | | | | | *10 230 | 8 440 | *8 000 | 5 490 | *6 940 | 3 920 | *4 650 | 3 360 | 8.3 m |
| | 1.5 m | kg | | | | | *12 250 | 7 880 | *9 020 | 5 230 | *7 410 | 3 800 | *4 990 | 3 230 | 8.4 m |
| | 0 m | kg | | | | | *13 250 | 7 560 | *9 680 | 5 040 | *7 720 | 3 700 | *5 610 | 3 280 | 8.2 m |
| | -1.5 m | kg | *6 750 | *6 750 | *10 980 | *10 980 | *13 190 | 7 460 | *9 770 | 4 950 | *7 580 | 3 660 | *6 740 | 3 540 | 7.7 m |
| | -3.0 m | kg | *11 760 | *11 760 | *17 000 | 14 820 | *12 150 | 7 510 | *9 040 | 4 970 | | | *7 560 | 4 180 | 6.8 m |
| | -4.5 m | kg | | | *13 310 | *13 310 | *9 670 | 7 720 | | | | | *7 590 | 5 840 | 5.5 m |

Notes: 1. Machine in “Fine Mode-F” (Power Boost) for lifting capacities.
2. The above loads are in compliance with SAE J1097 and ISO 10567 Hydraulic Excavator Lifting Capacity Standards.
3. Rated loads do not exceed 87% of hydraulic lifting capacity or 75% of tipping load.
4. Rated loads marked with an asterisk (*) are limited by hydraulic capacity rather than tipping load.

**LIFTING CAPACITY - ECR255 L**

At the arm end without bucket.
For Lifting capacity including bucket. Simply subtract actual weight of the direct fit bucket or the bucket with quick fit from the following values.

| | Lifting point | | 1.5 m | | 3 m | | 4.5 m | | 6.0 m | | 7.5 m | | Max. reach | | |
|---|---|---|---|---|---|---|---|---|---|---|---|---|---|---|---|
| | | | Along UC | Across UC | Along UC | Across UC | Along UC | Across UC | Along UC | Across UC | Along UC | Across UC | Along UC | Across UC | Max. m |
| Boom: 5.76 m<br>2 piece boom<br>Arm: 2.5 m<br>Shoe: 700 mm<br>CWT: 6200 kg | 9 m | kg | | | *9 840 | *9 840 | | | | | | | *8 670 | *8 670 | 3.6 m |
| | 7.5 m | kg | | | *8 290 | *8 290 | *8 730 | 8 500 | | | | | *6 830 | 5 600 | 5.7 m |
| | 6 m | kg | | | *7 680 | *7 680 | *8 800 | 8 350 | 8 340 | 5 210 | | | *6 280 | 4 050 | 6.9 m |
| | 4.5 m | kg | | | | | *11 340 | 7 900 | 8 140 | 5 040 | 5 650 | 3 510 | 5 440 | 3 380 | 7.7 m |
| | 3 m | kg | | | | | 12 580 | 7 280 | 7 850 | 4 790 | 5 550 | 3 420 | 4 950 | 3 050 | 8.1 m |
| | 1.5 m | kg | | | | | 11 980 | 6 780 | 7 580 | 4 540 | 5 430 | 3 310 | 4 800 | 2 930 | 8.1 m |
| | 0 m | kg | | | | | 11 730 | 6 570 | 7 410 | 4 390 | 5 350 | 3 240 | 4 920 | 3 000 | 8.0 m |
| | -1.5 m | kg | | | *9 780 | *9 780 | *10 700 | 6 560 | 7 370 | 4 360 | | | 5 400 | 3 280 | 7.5 m |
| | -3.0 m | kg | | | | | *7 710 | 6 690 | *5 820 | 4 450 | | | | | 6.6 m |
| Boom: 5.76 m<br>2 piece boom<br>Arm: 2.9 m<br>Shoe: 700 mm<br>CWT: 6200 kg | 9 m | kg | | | *7 890 | *7 890 | | | | | | | *5 990 | *5 990 | 4.4 m |
| | 7.5 m | kg | | | | | *7 010 | *7 010 | *5 930 | 5 280 | | | *4 920 | 4 850 | 6.3 m |
| | 6 m | kg | | | *6 060 | *6 060 | *7 010 | *7 010 | *7 170 | 5 280 | | | *4 550 | 3 660 | 7.4 m |
| | 4.5 m | kg | | | *9 910 | *9 910 | *9 130 | 8 040 | 8 210 | 5 100 | 5 690 | 3 550 | *4 440 | 3 100 | 8.1 m |
| | 3 m | kg | | | | | *12 360 | 7 410 | 7 910 | 4 830 | 5 560 | 3 430 | *4 520 | 2 820 | 8.5 m |
| | 1.5 m | kg | | | | | 12 070 | 6 850 | 7 610 | 4 560 | 5 420 | 3 310 | 4 460 | 2 720 | 8.5 m |
| | 0 m | kg | | | | | 11 730 | 6 560 | 7 400 | 4 380 | 5 320 | 3 220 | 4 560 | 2 770 | 8.4 m |
| | -1.5 m | kg | | | *9 410 | *9 410 | *11 330 | 6 500 | 7 330 | 4 310 | 5 300 | 3 190 | 4 950 | 3 000 | 7.9 m |
| | -3.0 m | kg | | | | | *8 660 | 6 590 | *6 620 | 4 370 | | | *4 660 | 3 540 | 7.1 m |
| Boom: 5.76m<br>2 piece boom<br>Arm: 2.5 m<br>Shoe: 700 mm<br>CWT: 6200 kg<br>Dozer blade down | 9 m | kg | | | *9 840 | *9 840 | | | | | | | *8 670 | *8 670 | 3.6 m |
| | 7.5 m | kg | | | *8 290 | *8 290 | *8 730 | *8 730 | | | | | *6 830 | 6 220 | 5.7 m |
| | 6 m | kg | | | *7 680 | *7 680 | *8 800 | *8 800 | *8 660 | 5 790 | | | *6 280 | 4 520 | 6.9 m |
| | 4.5 m | kg | | | | | *11 340 | 8 800 | *9 040 | 5 620 | *7 290 | 3 940 | *6 140 | 3 790 | 7.7 m |
| | 3 m | kg | | | | | *12 760 | 8 170 | *9 570 | 5 360 | *7 760 | 3 840 | *6 280 | 3 430 | 8.1 m |
| | 1.5 m | kg | | | | | *13 350 | 7 660 | *9 840 | 5 110 | *7 710 | 3 730 | *6 680 | 3 310 | 8.1 m |
| | 0 m | kg | | | | | *12 570 | 7 440 | *9 490 | 4 960 | *7 210 | 3 660 | *6 450 | 3 390 | 8.0 m |
| | -1.5 m | kg | | | *9 780 | *9 780 | *10 700 | 7 430 | *8 290 | 4 930 | | | *5 810 | 3 700 | 7.5 m |
| | -3.0 m | kg | | | | | *7 710 | 7 570 | *5 820 | 5 020 | | | | | 6.6 m |
| Boom: 5.76 m<br>2 piece boom<br>Arm: 2.9 m<br>Shoe: 700 mm<br>CWT: 6200 kg<br>Dozer blade down | 9 m | kg | | | *7 890 | *7 890 | | | | | | | *5 990 | *5 990 | 4.4 m |
| | 7.5 m | kg | | | | | *7 010 | *7 010 | *5 930 | 5 860 | | | *4 920 | *4 920 | 6.3 m |
| | 6 m | kg | | | *6 060 | *6 060 | *7 010 | *7 010 | *7 170 | 5 860 | | | *4 550 | 4 090 | 7.4 m |
| | 4.5 m | kg | | | *9 910 | *9 910 | *9 130 | 8 940 | *8 480 | 5 680 | *6 780 | 3 970 | *4 440 | 3 490 | 8.1 m |
| | 3 m | kg | | | | | *12 360 | 8 300 | *9 360 | 5 400 | *7 660 | 3 860 | *4 520 | 3 180 | 8.5 m |
| | 1.5 m | kg | | | | | *13 270 | 7 730 | *9 770 | 5 130 | *7 710 | 3 730 | *4 760 | 3 070 | 8.5 m |
| | 0 m | kg | | | | | *12 890 | 7 440 | *9 610 | 4 950 | *7 400 | 3 640 | *5 240 | 3 130 | 8.4 m |
| | -1.5 m | kg | | | *9 410 | *9 410 | *11 330 | 7 380 | *8 660 | 4 880 | *6 370 | 3 620 | *5 610 | 3 390 | 7.9 m |
| | -3.0 m | kg | | | | | *8 660 | 7 470 | *6 620 | 4 940 | | | *4 660 | 3 990 | 7.1 m |

Notes: 1. Machine in “Fine Mode-F” (Power Boost) for lifting capacities.
2. The above loads are in compliance with SAE J1097 and ISO 10567 Hydraulic Excavator Lifting Capacity Standards.
3. Rated loads do not exceed 87% of hydraulic lifting capacity or 75% of tipping load.
4. Rated loads marked with an asterisk (*) are limited by hydraulic capacity rather than tipping load.

# Specifications

**LIFTING CAPACITY - ECR255 L**

At the arm end without bucket.
For Lifting capacity including bucket. Simply subtract actual weight of the direct fit bucket or the bucket with quick fit from the following values.

| | Lifting point | | 1.5 m | | 3 m | | 4.5 m | | 6.0 m | | 7.5 m | | Max. reach | | |
|---|---|---|---|---|---|---|---|---|---|---|---|---|---|---|---|
| | | | Along UC | Across UC | Along UC | Across UC | Along UC | Across UC | Along UC | Across UC | Along UC | Across UC | Along UC | Across UC | Max. m |
| Boom : 5.7 m GP<br>Arm : 2.5 m<br>Shoe : 800 mm<br>CWT : 6 200 kg | 9 m | kg | | | *8 380 | *8 380 | | | | | | | *8 380 | *8 380 | 3.1 m |
| | 7.5 m | kg | | | | | *6 890 | *6 890 | | | | | *6 680 | 6 210 | 5.5 m |
| | 6 m | kg | | | | | *7 210 | *7 210 | *6 880 | 5 340 | | | *6 230 | 4 400 | 6.7 m |
| | 4.5 m | kg | | | | | *8 700 | 8 100 | *7 430 | 5 180 | | | 5 780 | 3 640 | 7.5 m |
| | 3 m | kg | | | | | *10 880 | 7 520 | 8 000 | 4 940 | 5 650 | 3 530 | 5 240 | 3 270 | 7.9 m |
| | 1.5 m | kg | | | | | 12 230 | 7 020 | 7 730 | 4 700 | 5 530 | 3 420 | 5 050 | 3 130 | 8.0 m |
| | 0 m | kg | | | | | 11 930 | 6 770 | 7 550 | 4 540 | 5 440 | 3 340 | 5 170 | 3 180 | 7.8 m |
| | -1.5 m | kg | | | *11 650 | *11 650 | 11 870 | 6 720 | 7 480 | 4 480 | | | 5 680 | 3 470 | 7.3 m |
| | -3.0 m | kg | | | *15 910 | 13 280 | *11 700 | 6 800 | 7 540 | 4 530 | | | 6 930 | 4 200 | 6.4 m |
| | -4.5 m | kg | | | *11 740 | *11 740 | *8 570 | 7 070 | | | | | *7 760 | 6 350 | 4.9 m |
| Boom : 5.7 m GP<br>Arm : 2.9 m<br>Shoe : 800 mm<br>CWT : 6 200 kg | 9 m | kg | | | | | | | | | | | *5 830 | *5 830 | 4.0 m |
| | 7.5 m | kg | | | | | *6 150 | *6 150 | *4 920 | *4 920 | | | *4 830 | *4 830 | 6.0 m |
| | 6 m | kg | | | | | *6 530 | *6 530 | *6 380 | 5 400 | | | *4 530 | 3 980 | 7.2 m |
| | 4.5 m | kg | | | *10 230 | *10 230 | *8 010 | *8 010 | *7 000 | 5 240 | 5 790 | 3 660 | *4 490 | 3 350 | 7.9 m |
| | 3 m | kg | | | | | *10 230 | 7 640 | *8 000 | 4 980 | 5 670 | 3 550 | *4 650 | 3 030 | 8.3 m |
| | 1.5 m | kg | | | | | *12 250 | 7 090 | 7 760 | 4 720 | 5 530 | 3 420 | 4 700 | 2 910 | 8.4 m |
| | 0 m | kg | | | | | 11 950 | 6 780 | 7 540 | 4 530 | 5 420 | 3 320 | 4 790 | 2 950 | 8.2 m |
| | -1.5 m | kg | *6 750 | *6 750 | *10 980 | *10 980 | 11 820 | 6 680 | 7 440 | 4 440 | 5 380 | 3 280 | 5 200 | 3 180 | 7.7 m |
| | -3.0 m | kg | *11 760 | *11 760 | *17 000 | 13 110 | 11 880 | 6 720 | 7 470 | 4 460 | | | 6 180 | 3 750 | 6.8 m |
| | -4.5 m | kg | | | *13 310 | *13 310 | *9 670 | 6 930 | | | | | *7 590 | 5 260 | 5.5 m |
| Boom : 5.7 m GP<br>Arm : 2.5 m<br>Shoe : 800 mm<br>CWT : 6 200 kg<br>Dozer blade down | 9 m | kg | | | *8 380 | *8 380 | | | | | | | *8 380 | *8 380 | 3.1 m |
| | 7.5 m | kg | | | | | *6 890 | *6 890 | | | | | *6 680 | *6 680 | 5.5 m |
| | 6 m | kg | | | | | *7 210 | *7 210 | *6 880 | 5 920 | | | *6 230 | 4 900 | 6.7 m |
| | 4.5 m | kg | | | | | *8 700 | *8 700 | *7 430 | 5 760 | | | *6 200 | 4 060 | 7.5 m |
| | 3 m | kg | | | | | *10 880 | 8 410 | *8 380 | 5 510 | *7 220 | 3 960 | *6 460 | 3 670 | 7.9 m |
| | 1.5 m | kg | | | | | *12 700 | 7 900 | *9 290 | 5 270 | *7 610 | 3 840 | *7 010 | 3 520 | 8.0 m |
| | 0 m | kg | | | | | *13 390 | 7 650 | *9 820 | 5 110 | *7 790 | 3 760 | *7 490 | 3 590 | 7.8 m |
| | -1.5 m | kg | | | *11 650 | *11 650 | *13 040 | 7 600 | *9 720 | 5 040 | | | *7 740 | 3 910 | 7.3 m |
| | -3.0 m | kg | | | *15 910 | 15 160 | *11 700 | 7 680 | *8 660 | 5 100 | | | *7 950 | 4 730 | 6.4 m |
| | -4.5 m | kg | | | *11 740 | *11 740 | *8 570 | 7 950 | | | | | *7 760 | 7 130 | 4.9 m |
| Boom : 5.7 m GP<br>Arm : 2.9 m<br>Shoe : 800 mm<br>CWT : 6 200 kg<br>Dozer blade down | 9 m | kg | | | | | | | | | | | *5 830 | *5 830 | 4.0 m |
| | 7.5 m | kg | | | | | *6 150 | *6 150 | *4 920 | *4 920 | | | *4 830 | *4 830 | 6.0 m |
| | 6 m | kg | | | | | *6 530 | *6 530 | *6 380 | 5 980 | | | *4 530 | 4 430 | 7.2 m |
| | 4.5 m | kg | | | *10 230 | *10 230 | *8 010 | *8 010 | *7 000 | 5 810 | *6 170 | 4 080 | *4 490 | 3 750 | 7.9 m |
| | 3 m | kg | | | | | *10 230 | 8 530 | *8 000 | 5 550 | *6 940 | 3 970 | *4 650 | 3 400 | 8.3 m |
| | 1.5 m | kg | | | | | *12 250 | 7 970 | *9 020 | 5 290 | *7 410 | 3 840 | *4 990 | 3 270 | 8.4 m |
| | 0 m | kg | | | | | *13 250 | 7 650 | *9 680 | 5 100 | *7 720 | 3 740 | *5 610 | 3 320 | 8.2 m |
| | -1.5 m | kg | *6 750 | *6 750 | *10 980 | *10 980 | *13 190 | 7 550 | *9 770 | 5 010 | *7 580 | 3 700 | *6 740 | 3 590 | 7.7 m |
| | -3.0 m | kg | *11 760 | *11 760 | *17 000 | 14 990 | *12 150 | 7 600 | *9 040 | 5 030 | | | *7 560 | 4 230 | 6.8 m |
| | -4.5 m | kg | | | *13 310 | *13 310 | *9 670 | 7 810 | | | | | *7 590 | 5 910 | 5.5 m |

Notes: 1. Machine in “Fine Mode-F” (Power Boost) for lifting capacities.
2. The above loads are in compliance with SAE J1097 and ISO 10567 Hydraulic Excavator Lifting Capacity Standards.
3. Rated loads do not exceed 87% of hydraulic lifting capacity or 75% of tipping load.
4. Rated loads marked with an asterisk (*) are limited by hydraulic capacity rather than tipping load.

**LIFTING CAPACITY - ECR255 L**

At the arm end without bucket.
For Lifting capacity including bucket. Simply subtract actual weight of the direct fit bucket or the bucket with quick fit from the following values.

| | Lifting point | | 1.5 m | | 3 m | | 4.5 m | | 6.0 m | | 7.5 m | | Max. reach | | |
|---|---|---|---|---|---|---|---|---|---|---|---|---|---|---|---|
| | | | Along UC | Across UC | Along UC | Across UC | Along UC | Across UC | Along UC | Across UC | Along UC | Across UC | Along UC | Across UC | Max. m |
| Boom : 5.76 m<br>2 piece boom<br>Arm : 2.5 m<br>Shoe : 800 mm<br>CWT : 6 200 kg | 9 m | kg | | | *9 840 | *9 840 | | | | | | | *8 670 | *8 670 | 3.6 m |
| | 7.5 m | kg | | | *8 290 | *8 290 | *8 730 | 8 580 | | | | | *6 830 | 5 660 | 5.7 m |
| | 6 m | kg | | | *7 680 | *7 680 | *8 800 | 8 440 | 8 430 | 5 270 | | | *6 280 | 4 100 | 6.9 m |
| | 4.5 m | kg | | | | | *11 340 | 7 990 | 8 240 | 5 100 | 5 720 | 3 560 | 5 500 | 3 420 | 7.7 m |
| | 3 m | kg | | | | | 12 730 | 7 370 | 7 950 | 4 840 | 5 620 | 3 460 | 5 020 | 3 090 | 8.1 m |
| | 1.5 m | kg | | | | | 12 130 | 6 860 | 7 680 | 4 600 | 5 500 | 3 360 | 4 860 | 2 970 | 8.1 m |
| | 0 m | kg | | | | | 11 870 | 6 650 | 7 510 | 4 450 | 5 420 | 3 290 | 4 990 | 3 040 | 8.0 m |
| | -1.5 m | kg | | | *9 780 | *9 780 | *10 700 | 6 640 | 7 460 | 4 410 | | | 5 480 | 3 320 | 7.5 m |
| | -3.0 m | kg | | | | | *7 710 | 6 770 | *5 820 | 4 510 | | | | | 6.6 m |
| Boom : 5.76 m<br>2 piece boom<br>Arm : 2.9 m<br>Shoe : 800 mm<br>CWT : 6 200 kg | 9 m | kg | | | *7 890 | *7 890 | | | | | | | *5 990 | *5 990 | 4.4 m |
| | 7.5 m | kg | | | | | *7 010 | *7 010 | *5 930 | 5 340 | | | *4 920 | 4 900 | 6.3 m |
| | 6 m | kg | | | *6 060 | *6 060 | *7 010 | *7 010 | *7 170 | 5 340 | | | *4 550 | 3 710 | 7.4 m |
| | 4.5 m | kg | | | *9 910 | *9 910 | *9 130 | 8 130 | 8 310 | 5 150 | 5 760 | 3 590 | *4 440 | 3 140 | 8.1 m |
| | 3 m | kg | | | | | *12 360 | 7 490 | 8 000 | 4 880 | 5 630 | 3 480 | *4 520 | 2 860 | 8.5 m |
| | 1.5 m | kg | | | | | 12 220 | 6 930 | 7 700 | 4 620 | 5 500 | 3 350 | 4 520 | 2 760 | 8.5 m |
| | 0 m | kg | | | | | 11 880 | 6 650 | 7 500 | 4 440 | 5 390 | 3 260 | 4 620 | 2 810 | 8.4 m |
| | -1.5 m | kg | | | *9 410 | *9 410 | *11 330 | 6 580 | 7 420 | 4 370 | 5 370 | 3 240 | 5 020 | 3 040 | 7.9 m |
| | -3.0 m | kg | | | | | *8 660 | 6 680 | *6 620 | 4 430 | | | *4 660 | 3 580 | 7.1 m |
| Boom : 5.76 m<br>2 piece boom<br>Arm : 2.5 m<br>Shoe : 800 mm<br>CWT :6 200 kg<br>Dozer blade down | 9 m | kg | | | *9 840 | *9 840 | | | | | | | *8 670 | *8 670 | 3.6 m |
| | 7.5 m | kg | | | *8 290 | *8 290 | *8 730 | *8 730 | | | | | *6 830 | 6 280 | 5.7 m |
| | 6 m | kg | | | *7 680 | *7 680 | *8 800 | *8 800 | *8 660 | 5 850 | | | *6 280 | 4 570 | 6.9 m |
| | 4.5 m | kg | | | | | *11 340 | 8 890 | *9 040 | 5 680 | *7 290 | 3 980 | *6 140 | 3 830 | 7.7 m |
| | 3 m | kg | | | | | *12 760 | 8 260 | *9 570 | 5 420 | *7 760 | 3 890 | *6 280 | 3 480 | 8.1 m |
| | 1.5 m | kg | | | | | *13 350 | 7 750 | *9 840 | 5 180 | *7 710 | 3 780 | *6 680 | 3 350 | 8.1 m |
| | 0 m | kg | | | | | *12 570 | 7 530 | *9 490 | 5 020 | *7 210 | 3 710 | *6 450 | 3 430 | 8.0 m |
| | -1.5 m | kg | | | *9 780 | *9 780 | *10 700 | 7 520 | *8 290 | 4 990 | | | *5 810 | 3 750 | 7.5 m |
| | -3.0 m | kg | | | | | *7 710 | 7 660 | *5 820 | 5 080 | | | | | 6.6 m |
| Boom : 5.76 m<br>2 piece boom<br>Arm : 2.9 m<br>Shoe :800 mm<br>CWT : 6 200 kg<br>Dozer blade down | 9 m | kg | | | *7 890 | *7 890 | | | | | | | *5 990 | *5 990 | 4.4 m |
| | 7.5 m | kg | | | | | *7 010 | *7 010 | *5 930 | 5 920 | | | *4 920 | *4 920 | 6.3 m |
| | 6 m | kg | | | *6 060 | *6 060 | *7 010 | *7 010 | *7 170 | 5 920 | | | *4 550 | 4 140 | 7.4 m |
| | 4.5 m | kg | | | *9 910 | *9 910 | *9 130 | 9 030 | *8 480 | 5 740 | *6 780 | 4 020 | *4 440 | 3 530 | 8.1 m |
| | 3 m | kg | | | | | *12 360 | 8 390 | *9 360 | 5 460 | *7 660 | 3 900 | *4 520 | 3 220 | 8.5 m |
| | 1.5 m | kg | | | | | *13 270 | 7 820 | *9 770 | 5 190 | *7 710 | 3 770 | *4 760 | 3 110 | 8.5 m |
| | 0 m | kg | | | | | *12 890 | 7 530 | *9 610 | 5 010 | *7 400 | 3 680 | *5 240 | 3 170 | 8.4 m |
| | -1.5 m | kg | | | *9 410 | *9 410 | *11 330 | 7 470 | *8 660 | 4 940 | *6 370 | 3 660 | *5 610 | 3 430 | 7.9 m |
| | -3.0 m | kg | | | | | *8 660 | 7 560 | *6 620 | 5 000 | | | *4 660 | 4 040 | 7.1 m |

Notes: 1. Machine in “Fine Mode-F” (Power Boost) for lifting capacities.
2. The above loads are in compliance with SAE J1097 and ISO 10567 Hydraulic Excavator Lifting Capacity Standards.
3. Rated loads do not exceed 87% of hydraulic lifting capacity or 75% of tipping load.
4. Rated loads marked with an asterisk (*) are limited by hydraulic capacity rather than tipping load.

# Specifications

**LIFTING CAPACITY - ECR255 L**

At the arm end without bucket.
For Lifting capacity including bucket. Simply subtract actual weight of the direct fit bucket or the bucket with quick fit from the following values.

| | Lifting point | | 1.5 m | | 3 m | | 4.5 m | | 6.0 m | | 7.5 m | | Max. reach | | |
|---|---|---|---|---|---|---|---|---|---|---|---|---|---|---|---|
| | | | Along UC | Across UC | Along UC | Across UC | Along UC | Across UC | Along UC | Across UC | Along UC | Across UC | Along UC | Across UC | Max. m |
| Boom : 5.7 m GP<br>Arm : 2.5 m<br>Shoe : 900 mm<br>CWT : 6 200 kg | 9 m | kg | | | *8380 | *8380 | | | | | | | *8380 | *8380 | 3.1 m |
| | 7.5 m | kg | | | | | *6890 | *6890 | | | | | *6680 | 6230 | 5.5 m |
| | 6 m | kg | | | | | *7210 | *7210 | *6880 | 5350 | | | *6230 | 4420 | 6.7 m |
| | 4.5 m | kg | | | | | *8700 | 8120 | *7430 | 5200 | | | 5790 | 3650 | 7.5 m |
| | 3 m | kg | | | | | *10880 | 7540 | 8030 | 4950 | 5670 | 3550 | 5250 | 3280 | 7.9 m |
| | 1.5 m | kg | | | | | 12260 | 7040 | 7750 | 4710 | 5550 | 3430 | 5070 | 3140 | 8.0 m |
| | 0 m | kg | | | | | 11970 | 6790 | 7570 | 4550 | 5460 | 3350 | 5190 | 3190 | 7.8 m |
| | -1.5 m | kg | | | *11650 | *11650 | 11900 | 6740 | 7500 | 4490 | | | 5690 | 3480 | 7.3 m |
| | -3.0 m | kg | | | *15910 | 13310 | *11700 | 6820 | 7570 | 4550 | | | 6950 | 4220 | 6.4 m |
| | -4.5 m | kg | | | *11740 | *11740 | *8570 | 7090 | | | | | *7760 | 6360 | 4.9 m |
| Boom : 5.7 m GP<br>Arm : 2.9 m<br>Shoe : 900 mm<br>CWT : 6 200 kg | 9 m | kg | | | | | | | | | | | *5830 | *5830 | 4.0 m |
| | 7.5 m | kg | | | | | *6150 | *6150 | *4920 | *4920 | | | *4830 | *4830 | 6.0 m |
| | 6 m | kg | | | | | *6530 | *6530 | *6380 | 5420 | | | *4530 | 3990 | 7.2 m |
| | 4.5 m | kg | | | *10230 | *10230 | *8010 | *8010 | *7000 | 5250 | 5810 | 3670 | *4490 | 3360 | 7.9 m |
| | 3 m | kg | | | | | *10230 | 7660 | *8000 | 4990 | 5690 | 3560 | *4650 | 3040 | 8.3 m |
| | 1.5 m | kg | | | | | *12250 | 7110 | 7780 | 4730 | 5550 | 3430 | 4710 | 2920 | 8.4 m |
| | 0 m | kg | | | | | 11980 | 6800 | 7570 | 4540 | 5440 | 3330 | 4810 | 2960 | 8.2 m |
| | -1.5 m | kg | *6750 | *6750 | *10980 | *10980 | 11860 | 6700 | 7470 | 4450 | 5400 | 3290 | 5220 | 3190 | 7.7 m |
| | -3.0 m | kg | *11760 | *11760 | *17000 | 13150 | 11920 | 6740 | 7490 | 4480 | | | 6200 | 3770 | 6.8 m |
| | -4.5 m | kg | | | *13310 | *13310 | *9670 | 6950 | | | | | *7590 | 5270 | 5.5 m |
| Boom : 5.76 m<br>2 piece boom<br>Arm : 2.5 m<br>Shoe : 900 mm<br>CWT : 6 200 kg | 9 m | kg | | | *9840 | *9840 | | | | | | | *8670 | *8670 | 3.6 m |
| | 7.5 m | kg | | | *8290 | *8290 | *8730 | 8600 | | | | | *6830 | 5670 | 5.7 m |
| | 6 m | kg | | | *7680 | *7680 | *8800 | 8460 | 8450 | 5280 | | | *6280 | 4110 | 6.9 m |
| | 4.5 m | kg | | | | | *11340 | 8010 | 8260 | 5110 | 5730 | 3570 | 5520 | 3430 | 7.7 m |
| | 3 m | kg | | | | | *12760 | 7390 | 7970 | 4860 | 5630 | 3470 | 5030 | 3100 | 8.1 m |
| | 1.5 m | kg | | | | | 12170 | 6880 | 7700 | 4610 | 5510 | 3370 | 4880 | 2980 | 8.1 m |
| | 0 m | kg | | | | | 11910 | 6670 | 7530 | 4460 | 5440 | 3300 | 5000 | 3050 | 8.0 m |
| | -1.5 m | kg | | | *9780 | *9780 | *10700 | 6660 | 7490 | 4430 | | | 5490 | 3330 | 7.5 m |
| | -3.0 m | kg | | | | | *7710 | 6790 | *5820 | 4520 | | | | | 6.6 m |
| Boom : 5.76 m<br>2 piece boom<br>Arm : 2.9 m<br>Shoe : 900 mm<br>CWT : 6 200 kg | 9 m | kg | | | *7890 | *7890 | | | | | | | *5990 | *5990 | 4.4 m |
| | 7.5 m | kg | | | | | *7010 | *7010 | *5930 | 5350 | | | *4920 | 4920 | 6.3 m |
| | 6 m | kg | | | *6060 | *6060 | *7010 | *7010 | *7170 | 5350 | | | *4550 | 3720 | 7.4 m |
| | 4.5 m | kg | | | *9910 | *9910 | *9130 | 8150 | 8330 | 5170 | 5780 | 3600 | *4440 | 3150 | 8.1 m |
| | 3 m | kg | | | | | *12360 | 7510 | 8020 | 4900 | 5650 | 3490 | *4520 | 2870 | 8.5 m |
| | 1.5 m | kg | | | | | 12260 | 6950 | 7720 | 4630 | 5510 | 3360 | 4530 | 2770 | 8.5 m |
| | 0 m | kg | | | | | 11910 | 6670 | 7520 | 4450 | 5410 | 3270 | 4640 | 2810 | 8.4 m |
| | -1.5 m | kg | | | *9410 | *9410 | *11330 | 6600 | 7440 | 4380 | 5390 | 3250 | 5030 | 3050 | 7.9 m |
| | -3.0 m | kg | | | | | *8660 | 6700 | *6620 | 4440 | | | *4660 | 3590 | 7.1 m |

Notes: 1. Machine in “Fine Mode-F” (Power Boost) for lifting capacities.
2. The above loads are in compliance with SAE J1097 and ISO 10567 Hydraulic Excavator Lifting Capacity Standards.
3. Rated loads do not exceed 87% of hydraulic lifting capacity or 75% of tipping load.
4. Rated loads marked with an asterisk (*) are limited by hydraulic capacity rather than tipping load.

VOLVO
VOLVO
VOLVO
VOLVO
ECR145CL

# Equipment

| STANDARD & OPTIONAL EQUIPMENT | |
|---|---|
| • = Standard / o = Optional | |
| **Engine** | |
| Turbocharged, 4 stroke diesel engine with water cooling, direct injection and charged air cooler that meets Stage V requirements | • |
| Electric cooling fan system | • |
| New work mode with 10 steps | • |
| Cyclone pre-cleaner | • |
| Engine block heater | o |
| Coolant heater by diesel | o |
| Reversible fan drive | o |
| Fuel filler pump | o |
| Air filter, High efficiency | o |
| Delayed engine shutdown | o |
| Automatic engine shutdown | o |
| Water separator with heater | o |
| Arctic regeneration | o |
| Regeneration control | o |
| Oil sampling port for engine oil | o |
| **Electric / Electronic control system** | |
| Anti-theft with code lock system | • |
| Alternator, 180 A | • |
| Automatic idling system | • |
| Lock Out / Tag Out function on battery main switch | • |
| Standard light | • |
| Basic light package | o |
| Advanced light package | o |
| Deluxe light package | o |
| Arm light | o |
| LH light | o |
| Caretrack,4G GSM/Satellite | o |
| Joystick, 4 switch | o |
| Joystick, 4 switch & 1 prop | • |
| Joystick, simple L8 | o |
| Joystick, L8 | o |
| Batteries, 2 x 12 V / 200 Ah | o |
| **Undercarriage and structures** | |
| 3-point side access with handrail | • |
| Direct filling DEF (AdBlue) / Sight gauge and splash guard | • |
| Openable 1 piece hood | • |
| Undercovers (heavy duty) | • |
| HD Side door & hood with screen | o |
| Lower frame,Folder step,L | • |
| Lower frame,D/blade,F step,L | o |
| Lower frame,High walker | o |
| Link 600/700 mm double gr shoe | o |
| Link 600/700/800/900 mm triple gr shoe | • |
| Link 600 mm rubber shoe | o |
| Link 600 mm add rubber pad | o |
| Full track guard | o |
| Punched metal anti-slip plates | • |

| STANDARD & OPTIONAL EQUIPMENT | |
|---|---|
| • = Standard / o = Optional | |
| **Hydraulic system** | |
| EH-positive (Electro-Hydraulic) control system | • |
| Priority Adjustment | • |
| - Boom up & swing priority | • |
| - Boom down speed control | • |
| Shock reduction function, Boom/Arm | • |
| Auto power boost | • |
| Hydraulic oil mineral, 32 / 46 / 68 | • |
| Longlife hyd oil mineral, 32 / 46 / 68 | o |
| Hydraulic oil bio 46 | o |
| Oil leak line, on base machine/Boom/Arm | o |
| Auto warm up | o |
| Boom float function | o |
| Comfort driving control | o |
| Creep mode | o |
| Straight travel pedal | o |
| Variable X3 P-Q control | o |
| Hose rupture valve for boom, with overload warning device | • |
| Hose rupture valve for arm | • |
| Pattern change | o |
| Hydraulic attachment piping: | o |
| - Breaker & shear | o |
| - Slope/Rotator | o |
| - Grapple | o |
| - Quick coupler | o |
| - Oil leak line, on base machine/Boom/Arm | o |
| - Pressure pre-setting | o |
| **Cab and interior** | |
| Keyless engine start and stop | • |
| 8” HD display | • |
| ROPS certified cab | • |
| Tiltable left console | • |
| Digital hour meter | • |
| Wireless mobile charger with Kinematic sensor package option | • |
| Various storage space with cool/heated | • |
| Cleaning air gun | o |
| 1 piece wind shield cab | o |
| Cabin large mirror | • |
| Cabin large mirror, Heated | o |
| Basic / Premium / Deluxe seat | o |
| Seat belt, 2 inch 2 point / 3 inch 2 point / 3 inch 3 point | • |
| Climate control-HEPA filter | o |
| Radio with MP3/USB/Bluetooth | o |
| Front rain shield | o |
| Sun screen | o |
| Lower wiper | o |
| Sun shield, roof hatch | o |
| Foot rest, High mount | o |
| FOG (Falling Object Guard) | o |
| FOPS (Falling Object Protection Structure) | o |
| Safety net | o |

| STANDARD & OPTIONAL EQUIPMENT | |
|---|---|
| • = Standard / o = Optional | |
| **Digging equipment** | |
| Boom: 5.7 m monoblock, 5.76 m 2piece boom, 4.6m short | • |
| Arm: 2.2 m, 2.5 m, 2.9 m monoblock | • |
| Linkage | • |
| Manual centralized lubrication | • |
| Counterweight: 6 200 kg | • |
| Counterweight: 7 100 kg | o |
| **Machine Controls** | |
| Kinematic sensor package | • |
| Volvo Co-Pilot 2nd display, 12.8” touchable Full HD | • |
| Dig Assist, Start | o |
| Dig Assist, 2D | o |
| Dig Assist, In-Field Design | o |
| Dig Assist, Topcon 3D-MC | o |
| Dig Assist, Infield-Design Advanced | o |
| Dig Assist, On-Board Weighing | o |
| Dig Assist, Laser Receiver | o |
| Volvo Active Control | o |
| Dig Assist, Boundary Limit | o |
| **Safety and security** | |
| Travel alarm, beep / white noise | o |
| Flashing beacon, LED | o |
| Green light beacon | o |
| Rear view camera | • |
| Side view camera | • |
| HD VSV (Volvo Smart View) | o |
| HD VSV with obstacle detection | o |
| Provision, HD VSV with obstacle detection | o |
| **Service and maintenance** | |
| Swing out A/C condenser | • |
| Fuel filler pump | o |
| Quick Hydraulic Oil Fill connection | o |
| Jump start connector | o |
| Auto lubrication system | o |
| Tool kit | o |
| Spare parts kit | o |

Not all products are available in all markets. Under our policy of continuous improvement, we reserve the right to change specifications and design without prior notice.
The illustrations do not necessarily show the standard version of the machine.

ECR25
VOLVO

VOLVO

Ref. No 200XXXXX_A / English-21 / 2026.01 / EXC / Volvo, Global Marketing