Volvo Excavators 34.4 - 41.5 t 299 hp

EC360

Volvo Construction Equipment

EC360

With a modern cab and easy to service, the EC360 can help you keep productivity high and your TCO low.

Get an edge thanks to versatility

Commonly used in quarries, for trenching, digging or preparing construction sites, the EC360 is a versatile machine. Regardless of applications, the EC360F is a straightforward solution with big payback. Save fuel, lower Total Cost of Ownership and boost the profitability of your operation. Now even easier to service and with a comfortable modern cab, it is a machine that meets the requirements of everyone from owner to operator.

Operator comfort

- More precise controls
- Quieter cab
- Personalized settings for greater comfort
- ROPS cab as standard

Smart View with Obstacle Detection

- Increased safety onsite and for the operator
- Radar warns for items outside the screen
- HD screen
- Human identifying alarm separate from other obstacles

Serviceability

- Ground level access for service
- Long service intervals
- Grouped filters and lubrication points
- Quick and easy oil changes

Fuel Efficiency

- Up to 7% improvement
- Powerful and eficient Volvo engine
- 2% lower engine RPM
- 5% hydraulic system improvement

Productivity

- Volvo Active Control
- Dig Assist with On-Board Weighing
- Electro-hydraulic system
- Boom/Swing & Boom/Travel priority functions

Co-Pilot

The new Volvo Co-Pilot features a new 12.8" display with full HD resolution. Associated with the new HD side and rear camera, it gives better visibility on your operations. Both hardware and software improvements provide increased control on the Dig Assist applications.

Smooth Control

You will find the new joystick controls offer smoother, easier operation. Because the controls are more precise, it is easier for you to achieve what you are trying to do, leading to better machine performance.

Volvo Smart View

Volvo Smart View with Obstacle Detection provides operators with a 360° view of the machines surroundings thanks to the camera and the new radar detection system. This high technology can identify obstacles as either an object or a human being, allowing the operator to take appropriate action.

Stay connected

In the comfort of the new cab, you can charge your mobile phone wirelessly or plugged in. You also have the option to use USB connections to access your music playlists or podcasts. The Bluetooth speaker enables you to have clear communication when making a phone call.

Comfort

The new style cab's ambition is to being more comfortable and make your work easier. A handy storage space allows you to store your coolbox or shoes while you work. You will enjoy reduced noise levels, built-in sunscreen and improved HVAC. Moreover, the new comfortable seat offer will allow to reduce the operator fatigue when working all day.

Fuel efficiency

In the new Volvo excavators our improved electro-hydraulic system reduces your fuel consumption dramatically. It is done by regulating engine speed and hydraulic flow rate based on the task at hand. This ensures that only the necessary amount of energy is used, leading to improved fuel efficiency and lower operating costs.

Outstanding cooling performance

The EC360 is equipped with a smart cooling system that consists of electric and hydraulic fans. It automatically adjusts fan speed according to engine coolant temperature and hydraulic workload. This minimizes unnecessary energy consumption and improves overall fuel efficiency.
By reducing engine load and preventing overheating, the system ensures optimum excavator performance, extends component life and lowers operating costs.

New electro-hydraulic system

At the heart of the fuel efficiency improvements is the new electro-hydraulic system with enhanced main control valve (MCV). This intelligent technology uses electronic sensors to monitor the operator's movements and send signals to the machine's on-board computer (ECU) which processes the information and sends commands to the main control valve. The result is smooth and precise movement of the excavator's boom, bucket, and other hydraulic functions allowing for more accurate digging and loading.

Dig Assist

A must-have on the modern construction site, Dig Assist provides unrivalled machine guidance and control technology, enabling operators to work with the highest levels of precision and accuracy.
The addition of On-Board Weighing provides real-time insights into the bucket's load, helping to eliminate over-loading, underloading, reweighing and waiting times.

Productivity

Advanced electric control joystick and full electric travel pedals provide lightning-fast response times. Boom/Swing priority functions help operators work with speed and ease by prioritizing one function over another, improving cycle times.

Serviceability

Minimizing downtime is key to protect your total cost of ownership. Easy access, clean and quick oil changes, as well as 1 000-hour intervals for engine oil, oil and fuel filter further increase your machine availability. Swing out condenser also makes cleaning of the radiator and oil cooler more convenient.

Volvo EC360 in detail

Engine

The latest generation, Volvo engine Tier 4f / Stage V emissions compliant diesel engine fully meets the demands of the latest, emsissions regulations. Featuring Volvo Advanced Combustion Technology (V-ACT), it is designed to deliver superior performance and fuel efficiency. The engine uses precise, high pressure fuel injectors, turbo charger and air-to-air intercooler, and electronic engine controls to optimize machine performance.
- Air Filter: 3-stage with precleaner
- Automatic Idling System: Reduces engine speed to idle when the levers and pedals are not activated resulting in less fuel consumption and low cab noise levels.

Engine	Brand	Volvo D8M
Max power at	rpm	1,600
Net, ISO 9249/SAE J1349	kW	219
	hp	298
Gross, ISO 14396/SAE J1995	kW	220
	hp	299
Max torque	Nm	1,400
at engine speed	rpm	1,400
No. of cylinders		6
Displacement	lit	7.7
Bore	mm	110
Stroke	mm	135

Electrical System

High-capacity electrical system that is well protected. Waterproof doublelock harness plugs are used to secure corrosion-free connections. The main relays and solenoid valves are shielded to prevent damage. The master switch is standard. Contronics provides advanced monitoring of machine functions and important diagnostic information.

Voltage	V	24
Batteries	V	2 x 12
Battery capacity	Ah	170
Alternator	V/A	28.3 / 120
Start motor	V - kW	24 x 5.5

Undercarriage

The undercarriage has a robust X-shaped frame. Greased and sealed track chains are standard.

		EC360F L
Track shoe		2 x 48
Link pitch	mm	216
Shoe width, triple grouser	mm	600/700/750 /800/900
Bottom rollers		2 x 8
Top rollers		2 x 2

		EC360F NL
Track shoe		2 x 48
Link pitch	mm	216
Shoe width, triple grouser	mm	600/700/750 /800/900
Bottom rollers		2 x 8
Top rollers		2 x 2

Swing System

The swing system uses an axial piston motors, driving a planetary gearbox for maximum torque. An automatic holding brake and antirebound valve are standard.

Max. slew speed	rpm	10.3
Max. slew torque	kN/m	126.2

Travel System

Each track is powered by an automatic two-speed shift travel motor. The track brakes are multi-disc, spring-applied and hydraulic released. The travel motor, brake and planetary gears are well protected within the track frame.

Max. drawbar pull	kN	261
Max. travel speed (low)	km/h	3.3
Max. travel speed (high)	km/h	5.1
Gradeability	°	35

Cab

The operator's cab has easy access via a wide door opening. The cab is supported on hydraulic dampening mounts to reduce shock and vibration levels. These along with sound absorbing lining provide low noise levels. The cab has excellent all-round visibility. The front windshield can easily slide up into the ceiling, and the lower front glass can be removed and stored in the side door.
Integrated air-conditioning and heating system: The pressurized and filtered cab air is supplied by an automatically controlled fan. The air is distributed throughout the cab from 14 vents.
Ergonomic operator's seat: The adjustable seat and joystick console move independently to accommodate the operator. The seat has 12 different adjustments plus a seat belt for the operator's comfort and safety.

Sound Level

Sound level in cab according to ISO 6396		
L_{pA}	dB	71
External sound level according to ISO 6395, EU Noise Directive (2000/14/EC)		
L_{WA}	dB	105

Service Refill

Fuel tank	lit	580
DEF/AdBlue® tank	lit	50
Hydraulic system, total	lit	465
Hydraulic tank	lit	215
Engine oil	lit	30
Engine coolant	lit	44
Slew reduction unit	lit	6
Travel reduction unit	lit	2 x 6.8

Hydraulic System

The new electro-hydraulic system and new MCV (main control valve) use intelligent technology to control on-demand flow for highproductivity, highdigging capacity and excellent fuel consumption.
The following important functions are included in the system:
Summation system: Combines the flow of both hydraulic pumps to ensure quick cycle times and high productivity
Boom priority: Gives priority to the boom operation for faster raising when loading or performing deep excavations.
Arm priority: Gives priority to the arm operation for faster cycle times in leveling and for increased bucket filling when digging.
Holding valves: Boom and arm holding valves prevent the digging equipment from creeping.
Power boost: All digging and lifting forces are increased.
Regeneration system: Prevents cavitation and provides flow to other movements during simultaneous operations for maximum productivity.
Swing priority: Gives priority to swing functions for faster simultaneous operations.

Main pump: 2 x Variable displacement axial piston pumps		
Maximum flow	l/min	2 x 288
Pilot pump: Gear pump		
Maximum flow	l/min	20
Max. pressure		
Implement	MPa	33.3 / 36.3
Travel circuit	MPa	33.3
Slew circuit	MPa	27.9
Pilot circuit	MPa	3.9

Hydraulic Cylinders

Boom		2
Bore x Stroke	ø x mm	150 x 1 530
Arm		1
Bore x Stroke	ø x mm	170 x 1 700
Bucket		1
Bore x Stroke	ø x mm	140 x 1 285

Specifications

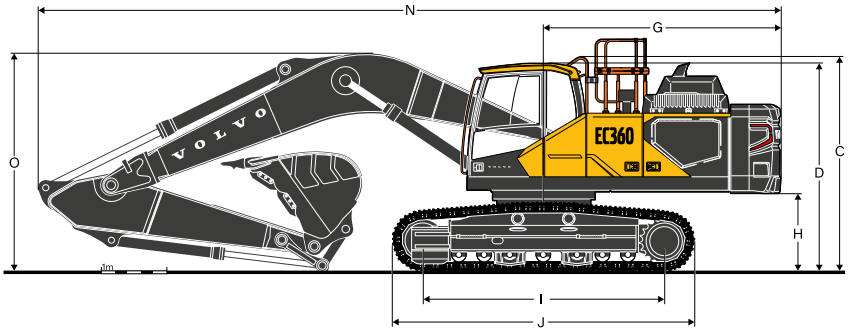

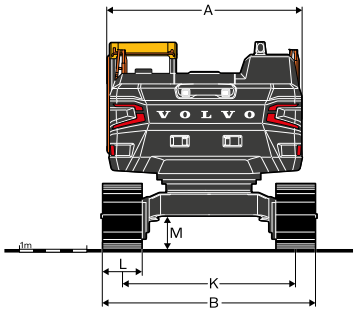

DIMENSIONS

	Unit	EC360F L			EC360F NL		
Boom	**m**	**6.45**			**6.45**		
Arm	**m**	**2.6**	**3.2**	**3.9**	**2.6**	**3.2**	**3.9**
A. Overall width of upper structure*	mm	2 890	2 890	2 890	2 890	2 890	2 890
B. Overall width**	mm	3 190	3 190	3 190	2 990	2 990	2 990
C. Overall height of cab	mm	3 170	3 170	3 170	3 170	3 170	3 170
D. Overall height of handrail	mm	3 275	3 275	3 275	3 275	3 275	3 275
E. Overall height of guardrail	mm	3 540	3 540	3 540	3 540	3 540	3 540
F. Tail swing radius	mm	3 600	3 600	3 600	3 600	3 600	3 600
G. Overall height of engine hood	mm	2 985	2 985	2 985	2 985	2 985	2 985
H. Counterweight clearance *	mm	1 170	1 170	1 170	1 170	1 170	1 170
I. Tumbler length	mm	4 020	4 020	4 020	4 020	4 020	4 020
J. Track length	mm	4 945	4 945	4 945	4 945	4 945	4 945
K. Track gauge	mm	2 590	2 590	2 590	2 390	2 390	2 390
L. Shoe width	mm	600	600	600	600	600	600
M. Min. ground clearance ***	mm	500	500	500	500	500	500
N. Overall length	mm	11 295	11 205	11 245	11 295	11 205	11 245
O. Overall height of boom	mm	3 685	3 480	3 710	3 685	3 480	3 710

* Exclude walkway, handrail

** Shoe end to end

*** Without shoe grouser

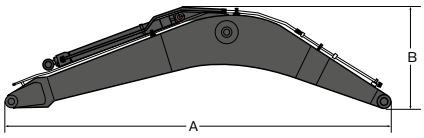

DIMENSIONS

Description	Unit	Boom		
	m	**6.45 GP**	**6.45 HD**	**6.45 XD**
A. Length	mm	6 710	6 710	6 710
B. Height	mm	1 875	1 875	1 875
Width	mm	816	816	816
Weight	kg	3 140	3 325	3 470

* Includes cylinder, piping and pin, excludes boom cyl. Pin

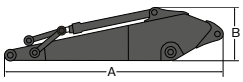

DIMENSIONS

Description	Unit	Arm				
	m	**2.6 HD**	**3.2 GP**	**3.2 HD**	**3.2 XD**	**3.9 GP**
A. Length	mm	3 760	4 345	4 345	4 345	5 045
B. Height	mm	1 115	1 060	1 060	1 060	1 080
Width	mm	440	440	440	440	440
Weight	kg	2 065	1 995	2 115	2 170	2 310

* Includes cylinder, linkage and pin

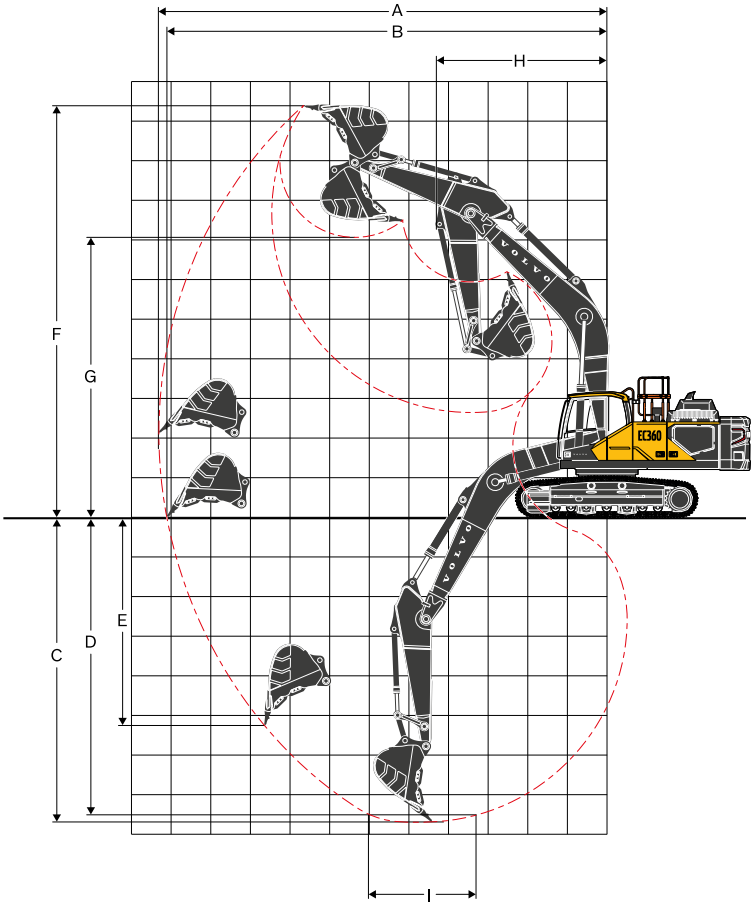

WORKING RANGES WITH DIRECT FIT BUCKET						
Description			**Unit**	**EC360F L, NL**		
Boom			**m**	**6.45**		
Arm			**m**	**2.6**	**3.2**	**3.9**
A. Max. digging reach			mm	10 705	11 225	11 865
B. Max. digging reach on ground			mm	10 485	11 020	11 670
C. Max. digging depth			mm	6 995	7 595	8 295
D. Max.digging depth (I=(2.44 m level)			mm	6 810	7 430	8 150
E. Max. vertical wall digging depth			mm	4 720	5 135	5 715
F. Max. cutting height			mm	10 215	10 380	10 645
G. Max. dumping height			mm	6 945	7 135	7 410
H. Min. front swing radius			mm	4 320	4 295	4 305
DIGGING FORCES WITH DIRECT FIT BUCKET						
Breakout force (bucket)	Normal	SAE J1179	kN	176	177	176
	Power boost	SAE J1179	kN	192	192	192
	Normal	ISO 6015	kN	201	201	201
	Power boost	ISO 6015	kN	218	219	219
Tearout force (arm)	Normal	SAE J1179	kN	187	156	136
	Power boost	SAE J1179	kN	203	169	148
	Normal	ISO 6015	kN	192	160	139
	Power boost	ISO 6015	kN	209	174	151
Rotation angle, bucket			°	178	178	178

Specifications

GROUND PRESSURE

EC360F L

Description	Shoe width	Operating weight	Ground pressure	Overall width	Operating weight	Ground pressure	Overall width
	mm	kg	kPa	mm	kg	kPa	mm
Triple grouser	600	35 410	67.9	3 190	35 340	67.8	3 190
	600 (HD)	35 460	68.0	3 190	35 380	67.8	3 190
	700	36 040	59.2	3 290	35 970	59.1	3 290
	800	36 430	52.4	3 390	36 350	52.3	3 390
	900	36 810	47.1	3 490	36 740	47.0	3 490
Double grouser	600	36 110	69.1	3 190	36 040	69.0	3 190
Single grouser	750	36 620	56.0	3 340	36 550	55.9	3 340
		EC360F L, 6.45 m GP boom, 2.6 m HD arm, 1 670 kg bucket, 7 000 kg counterweight			**EC360F L, 6.45 m GP boom, 3.2 m GP arm, 1 670 kg bucket, 7 000 kg counterweight**		
Description	**Shoe width**	**Operating weight**	**Ground pressure**	**Overall width**	**Operating weight**	**Ground pressure**	**Overall width**
	mm	**kg**	**kPa**	**mm**	**kg**	**kPa**	**mm**
Triple grouser	600	35 660	68.4	3 190	35 600	68.3	3 190
	600 (HD)	35 700	68.5	3 190	35 640	68.3	3 190
	700	36 280	59.6	3 290	36 230	59.5	3 290
	800	36 670	52.7	3 390	36 610	52.6	3 390
	900	37 060	47.4	3 490	37 000	47.3	3 490
Double grouser	600	36 360	69.6	3 190	36 300	69.5	3 190
Single grouser	750	36 860	56.4	3 340	36 810	56.3	3 340
		EC360F L, 6.45 m GP boom, 3.9 m GP arm, 1 670 kg bucket, 7 000 kg counterweight			**EC360F L, 6.45 m HD boom, 2.6 m HD arm, 1 670 kg bucket, 7 000 kg counterweight**		
Description	**Shoe width**	**Operating weight**	**Ground pressure**	**Overall width**	**Operating weight**	**Ground pressure**	**Overall width**
	mm	**kg**	**kPa**	**mm**	**kg**	**kPa**	**mm**
Triple grouser	600	35 650	68.4	3 190	35 840	68.8	3 190
	600 (HD)	35 690	68.4	3 190	35 890	68.8	3 190
	700	36 270	59.6	3 290	36 470	59.9	3 290
	800	36 660	52.7	3 390	36 860	53.0	3 390
	900	37 050	47.4	3 490	37 240	47.6	3 490
Double grouser	600	36 350	69.6	3 190	36 540	70.0	3 190
Single grouser	750	36 850	56.3	3 340	37 050	56.6	3 340
		EC360F L, 6.45 m HD boom, 3.2 m HD arm, 1 670 kg bucket, 7 000 kg counterweight			**EC360F L, 6.45 m HD boom, 3.9 m GP arm, 1 670 kg bucket, 7 000 kg counterweight**		
Description	**Shoe width**	**Operating weight**	**Ground pressure**	**Overall width**	**Operating weight**	**Ground pressure**	**Overall width**
	mm	**kg**	**kPa**	**mm**	**kg**	**kPa**	**mm**
Triple grouser	600	35 750	68.6	3 190	35 850	68.8	3 190
	600 (HD)	35 790	68.6	3 190	35 890	68.8	3 190
	700	36 370	59.8	3 290	36 470	59.9	3 290
	800	36 760	52.9	3 390	36 860	53.0	3 390
	900	37 150	47.5	3 490	37 250	47.6	3 490
Double grouser	600	36 450	69.8	3 190	36 550	70.0	3 190
Single grouser	750	36 950	56.5	3 340	37 050	56.6	3 340
		EC360F L, 6.45 m XD boom, 2.6 m HD arm, 1 670 kg bucket, 7 000 kg counterweight			**EC360F L, 6.45 m XD boom, 3.2 m XD arm, 1 670 kg bucket, 7 000 kg counterweight**		

GROUND PRESSURE

EC360F NL

Description	Shoe width	Operating weight	Ground pressure	Overall width	Operating weight	Ground pressure	Overall width
	mm	kg	kPa	mm	kg	kPa	mm
Triple grouser	600	35 270	67.7	3 190	35 190	67.5	3 190
	600 (HD)	35 310	67.7	3 190	35 240	67.6	3 190
	700	35 890	59.0	3 290	35 820	58.9	3 290
	800	36 280	52.2	3 390	36 210	52.1	3 390
	900	36 670	46.9	3 490	36 590	46.8	3 490
Double grouser	600	35 960	68.9	3 190	35 890	68.7	3 190
Single grouser	750	36 470	55.8	3 340	36 400	55.6	3 340
		EC360F NL, 6.45 m GP boom, 2.6 m HD arm, 1 670 kg bucket, 7 000 kg counterweight			**EC360F NL, 6.45 m GP boom, 3.2 m GP arm, 1 670 kg bucket, 7 000 kg counterweight**		
Description	**Shoe width**	**Operating weight**	**Ground pressure**	**Overall width**	**Operating weight**	**Ground pressure**	**Overall width**
	mm	**kg**	**kPa**	**mm**	**kg**	**kPa**	**mm**
Triple grouser	600	35 510	68.1	3 190	35 450	68.0	3 190
	600 (HD)	35 550	68.2	3 190	35 500	68.1	3 190
	700	36 130	59.4	3 290	36 080	59.3	3 290
	800	36 520	52.5	3 390	36 470	52.4	3 390
	900	36 910	47.2	3 490	36 850	47.1	3 490
Double grouser	600	36 210	69.3	3 190	36 150	69.2	3 190
Single grouser	750	36 710	56.1	3 340	36 660	56.0	3 340
		EC360F NL, 6.45 m GP boom, 3.9 m GP arm, 1 670 kg bucket, 7 000 kg counterweight			**EC360F NL, 6.45 m HD boom, 2.6 m HD arm, 1 670 kg bucket, 7 000 kg counterweight**		
Description	**Shoe width**	**Operating weight**	**Ground pressure**	**Overall width**	**Operating weight**	**Ground pressure**	**Overall width**
	mm	**kg**	**kPa**	**mm**	**kg**	**kPa**	**mm**
Triple grouser	600	35 500	68.1	3 190	35 700	68.5	3 190
	600 (HD)	35 540	68.1	3 190	35 740	68.5	3 190
	700	36 130	59.4	3 290	36 320	59.7	3 290
	800	36 510	52.5	3 390	36 710	52.8	3 390
	900	36 900	47.2	3 490	37 100	47.4	3 490
Double grouser	600	36 200	69.3	3 190	36 400	69.7	3 190
Single grouser	750	36 710	56.1	3 340	36 900	56.4	3 340
		EC360F NL, 6.45 m HD boom, 3.2 m HD arm, 1 670 kg bucket, 7 000 kg counterweight			**EC360F NL, 6.45 m HD boom, 3.9 m GP arm, 1 670 kg bucket, 7 000 kg counterweight**		

Specifications

BUCKET SELECTION GUIDE

EC360F L with 600 mm shoe, 7 000 kg counterweight

Bucket Type			Capacity	Cutting width	Weight	Teeth	Recommended maximum material density (kg/m³)							
							6.45 m GP Boom			6.45 m HD Boom			6.45 m XD Boom	
			L	mm	kg	EA	H2.6 m Arm	G3.2 m Arm	G3.9 m Arm	H2.6 m Arm	G3.2 m Arm	G3.9 m Arm	H2.6 m Arm	X3.2 m Arm
Direct fit Buckets	Without Quick Coupler	GP	870	750	1 082	3	C	C	C	C	C	C	C	C
			1 000	900	1 281	4	C	C	C	C	C	C	C	C
			1 420	1 200	1 514	5	C	C	C	C	C	C	C	C
			1 670	1 350	1 629	5	C	C	C	C	C	C	C	C
			1 800	1 450	1 755	5	C	C	C	C	C	C	C	C
			1 920	1 500	1 769	5	C	C	B	C	C	B	C	C
			2 000	1 580	1 859	5	C	C	B	C	C	B	C	C
			2 330	1 750	1 967	5	C	B	A	C	B	A	C	B
		HD	1 000	900	1 425	4	D	D	D	D	D	D	D	D
			1 420	1 200	1 600	4	D	D	D	D	D	D	D	D
			1 420	1 200	1 679	4	D	D	D	D	D	D	D	D
			1 670	1 380	1 722	4	D	D	C	D	D	C	D	D
			1 670	1 380	1 801	4	D	D	C	D	D	C	D	D
			1 670	1 380	1 570	5	D	D	D	D	D	D	D	D
			1 670	1 380	1 821	5	D	D	C	D	D	C	D	D
			1 920	1 500	1 864	5	D	C	B	D	C	B	D	C
			1 920	1 500	1 890	5	D	C	B	D	C	B	D	C
			1 920	1 500	1 944	5	D	C	B	D	C	B	D	C
			1 920	1 500	1 970	5	D	C	B	D	C	B	D	C
		ED	1 920	1 530	2 368	4	C	C	A	C	B	A	C	B
			2 330	1 780	2 617	4	B	A	X	B	X	X	B	X
		HC	2 440	1 600	1 796	5	C	B	A	C	B	A	C	B
	U type Quick Coupler	GP	870	750	1 082	3	C	C	C	C	C	C	C	C
			1 000	900	1 281	4	C	C	C	C	C	C	C	C
			1 420	1 200	1 514	5	C	C	C	C	C	C	C	C
			1 670	1 350	1 629	5	C	C	B	C	C	B	C	C
			1 800	1 450	1 755	5	C	C	A	C	B	A	C	B
			1 920	1 500	1 769	5	C	B	X	C	B	X	C	B
			2 000	1 580	1 859	5	C	B	X	B	B	X	B	B
			2 330	1 750	1 967	5	B	X	X	B	X	X	B	X
		HD	1 000	900	1 425	4	D	D	D	D	D	D	D	D
			1 420	1 200	1 600	4	D	D	C	D	D	C	D	D
			1 420	1 200	1 679	4	D	D	C	D	D	C	D	D
			1 670	1 380	1 722	4	D	C	B	D	C	B	D	C
			1 670	1 380	1 801	4	D	C	B	D	C	B	D	C
			1 670	1 380	1 570	5	D	C	B	D	C	B	D	C
			1 670	1 380	1 821	5	D	C	B	D	C	B	D	C
			1 920	1 500	1 864	5	C	B	X	C	B	X	C	B
			1 920	1 500	1 890	5	C	B	X	C	B	X	C	B
			1 920	1 500	1 944	5	C	B	X	C	B	X	B	B
			1 920	1 500	1 970	5	C	B	X	C	B	X	B	B
		ED	1 920	1 530	2 368	4	B	A	X	B	X	X	B	X
			2 330	1 780	2 617	4	X	X	X	X	X	X	X	X
		HC	2 440	1 600	1 796	5	B	X	X	B	X	X	B	X
Quick Coupler Buckets	S-quick coupler	GP	1 000	900	1 328	4	C	C	C	C	C	C	C	C
			1 180	1 050	1 419	4	C	C	C	C	C	C	C	C
			1 420	1 200	1 571	5	C	C	C	C	C	C	C	C
			1 670	1 350	1 686	5	C	C	B	C	C	B	C	C
			1 920	1 500	1 809	5	C	C	A	C	B	A	C	B
		HD	1 000	900	1 320	4	D	D	D	D	D	D	D	D
			1 000	900	1 400	4	D	D	D	D	D	D	D	D
			1 420	1 200	1 655	5	D	D	C	D	D	C	D	D
			1 670	1 350	1 703	5	D	D	B	D	C	B	D	C
			1 670	1 350	1 782	5	D	C	B	D	C	B	D	C
			1 670	1 350	1 605	5	D	D	B	D	D	B	D	C
			1 920	1 500	1 823	5	C	C	A	C	B	A	C	B
			1 920	1 500	1 848	5	C	B	A	C	B	A	C	B
			1 920	1 500	1 902	5	C	B	A	C	B	A	C	B
			1 920	1 500	1 928	5	C	B	A	C	B	A	C	B
		ED	1 920	1 530	2 320	4	B	B	X	B	A	X	B	A
			2 330	1 780	2 563	4	X	X	X	X	X	X	X	X

Please consult with your Volvo dealer for the proper match of buckets and attachments to suit the application.
(In case of using bigger bucket than regional standard MRS, consultation with R&D is highly recommended)
The recommendations are given as a guide only, based on typical operation conditions.
Bucket capacity based on ISO 7451, heaped material with a 1:1 angle of repose.
Maximum load : Payload, bucket and additional tools such as quick coupler, rotator, ...
VA Boom : Variable angle boom or two-piece boom

Maximum materal density
D: 2 100 kg/m³ (3 500 lb/yd³)
C: 1 800 kg/m³ (3 100 lb/yd³)
B: 1 500 kg/m³ (2 500 lb/yd³)
A: 1 200 kg/m³ (2 000 lb/yd³)
X : Not recommended

BUCKET SELECTION GUIDE

EC360F NL with 600 mm shoe, 7 000 kg counterweight

Bucket Type			Capacity	Cutting width	Weight	Teeth	Recommended maximum material density (kg/m³)					
							6.45 m GP Boom			6.45 m HD Boom		
			L	mm	kg	EA	H2.6 m Arm	G3.2 m Arm	G3.9 m Arm	H2.6 m Arm	G3.2 m Arm	G3.9 m Arm
Direct fit Buckets	Without Quick Coupler	GP	870	750	1 082	3	C	C	C	C	C	C
			1 000	900	1 281	4	C	C	C	C	C	C
			1 420	1 200	1 514	5	C	C	C	C	C	C
			1 670	1 350	1 629	5	C	C	C	C	C	C
			1 800	1 450	1 755	5	C	C	B	C	C	B
			1 920	1 500	1 769	5	C	C	B	C	C	B
			2 000	1 580	1 859	5	C	B	A	C	B	A
			2 330	1 750	1 967	5	B	B	X	B	A	X
		HD	1 000	900	1 425	4	D	D	D	D	D	D
			1 420	1 200	1 600	4	D	D	D	D	D	D
			1 420	1 200	1 679	4	D	D	D	D	D	C
			1 670	1 380	1 722	4	D	D	B	D	D	B
			1 670	1 380	1 801	4	D	D	B	D	C	B
			1 670	1 380	1 570	5	D	D	C	D	D	C
			1 670	1 380	1 821	5	D	D	B	D	C	B
			1 920	1 500	1 864	5	C	C	B	C	B	B
			1 920	1 500	1 890	5	C	C	A	C	B	A
			1 920	1 500	1 944	5	C	B	A	C	B	A
			1 920	1 500	1 970	5	C	B	A	C	B	A
		ED	1 920	1 530	2 368	4	B	B	X	B	B	X
			2 330	1 780	2 617	4	X	X	X	X	X	X
		HC	2 440	1 600	1 796	5	B	B	X	B	A	X
	U type Quick Coupler	GP	870	750	1 082	3	C	C	C	C	C	C
			1 000	900	1 281	4	C	C	C	C	C	C
			1 420	1 200	1 514	5	C	C	B	C	C	B
			1 670	1 350	1 629	5	C	B	X	C	B	X
			1 800	1 450	1 755	5	B	B	X	B	B	X
			1 920	1 500	1 769	5	B	A	X	B	A	X
			2 000	1 580	1 859	5	B	X	X	B	X	X
			2 330	1 750	1 967	5	X	X	X	X	X	X
		HD	1 000	900	1 425	4	D	D	D	D	D	D
			1 420	1 200	1 600	4	D	C	B	D	C	B
			1 420	1 200	1 679	4	D	C	B	D	C	B
			1 670	1 380	1 722	4	C	B	X	C	B	X
			1 670	1 380	1 801	4	C	B	X	C	B	X
			1 670	1 380	1 570	5	C	B	A	C	B	A
			1 670	1 380	1 821	5	C	B	X	C	B	X
			1 920	1 500	1 864	5	B	A	X	B	X	X
			1 920	1 500	1 890	5	B	A	X	B	X	X
			1 920	1 500	1 944	5	B	X	X	B	X	X
			1 920	1 500	1 970	5	B	X	X	B	X	X
		ED	1 920	1 530	2 368	4	X	X	X	X	X	X
			2 330	1 780	2 617	4	X	X	X	X	X	X
		HC	2 440	1 600	1 796	5	X	X	X	X	X	X
Quick Coupler Buckets	S-quick coupler	GP	1 000	900	1 328	4	C	C	C	C	C	C
			1 180	1 050	1 419	4	C	C	C	C	C	C
			1 420	1 200	1 571	5	C	C	C	C	C	B
			1 670	1 350	1 686	5	C	C	A	C	C	A
			1 920	1 500	1 809	5	B	B	X	B	B	X
		HD	1 000	900	1 320	4	D	D	D	D	D	D
			1 000	900	1 400	4	D	D	D	D	D	D
			1 420	1 200	1 655	5	D	D	B	D	D	B
			1 670	1 350	1 703	5	C	C	A	C	B	A
			1 670	1 350	1 782	5	C	C	A	C	B	A
			1 670	1 350	1 605	5	D	C	B	D	C	B
			1 920	1 500	1 823	5	B	B	X	B	B	X
			1 920	1 500	1 848	5	B	B	X	B	B	X
			1 920	1 500	1 902	5	B	B	X	B	A	X
			1 920	1 500	1 928	5	B	B	X	B	A	X
		ED	1 920	1 530	2 320	4	B	X	X	A	X	X
			2 330	1 780	2 563	4	X	X	X	X	X	X

Please consult with your Volvo dealer for the proper match of buckets and attachments to suit the application.
(In case of using bigger bucket than regional standard MRS, consultation with R&D is highly recommended)
The recommendations are given as a guide only, based on typical operation conditions.
Bucket capacity based on ISO 7451, heaped material with a 1:1 angle of repose.
Maximum load : Payload, bucket and additional tools such as quick coupler, rotator, ...
VA Boom : Variable angle boom or two-piece boom

Maximum materal density
D: 2 100 kg/m³ (3 500 lb/yd³)
C: 1 800 kg/m³ (3 100 lb/yd³)
B: 1 500 kg/m³ (2 500 lb/yd³)
A: 1 200 kg/m³ (2 000 lb/yd³)
X : Not recommended

Specifications

LIFTING CAPACITY EC360F L

Lifting capacity at the arm end without bucket.
For lifting capacity including bucket, simply subtract actual weight of the direct fit bucket or the bucket with quick coupler from the following values.

	Lifting hook related to ground level		1.5 m		3.0 m		4.5 m		6.0 m		7.5 m		9.0 m		Max. reach		Max.
			Along UC	Across UC	Along UC	Across UC	Along UC	Across UC	Along UC	Across UC	Along UC	Across UC	Along UC	Across UC	Along UC	Across UC	m
Boom : 6.45 m HD	7.5 m	kg													*9 240	8 090	7.0 m
	6 m	kg							*9 780	*9 780	*9 170	7 180			*9 170	6 480	8.0 m
Arm : 2.6 m HD	4.5 m	kg					*14 290	*14 290	*11 160	9 820	*9 710	6 980			8 660	5 660	8.5 m
	3 m	kg							*12 790	9 270	10 390	6 720			8 090	5 250	8.8 m
Shoe : 600 mm	1.5 m	kg							*14 120	8 830	10 130	6 470			7 940	5 120	8.8 m
	0 m	kg					*20 150	12 990	13 930	8 580	9 960	6 320			8 190	5 260	8.6 m
CWT : 7 000 kg	-1.5 m	kg			*14 420	*14 420	*19 400	13 030	13 870	8 530	9 920	6 290			8 980	5 740	8.1 m
	-3 m	kg			*23 290	*23 290	*17 650	13 240	*13 510	8 650					10 730	6 820	7.2 m
	-4.5 m	kg			*18 460	*18 460	*14 180	13 700							*10 670	9 500	5.8 m
Boom : 6.45 m HD	7.5 m	kg									*8 310	7 400			*7 510	7 110	7.7 m
	6 m	kg									*8 420	7 330			*7 310	5 860	8.5 m
Arm : 3.2 m HD	4.5 m	kg					*12 780	*12 780	*10 320	10 030	*9 100	7 100	8 020	5 260	*7 380	5 180	9.1 m
	3 m	kg					*16 420	14 360	*12 060	9 450	*10 000	6 800	7 880	5 130	7 430	4 830	9.3 m
Shoe : 600 mm	1.5 m	kg					*19 100	13 430	*13 610	8 950	10 190	6 530	7 740	5 000	7 300	4 710	9.4 m
	0 m	kg					*20 110	13 030	13 990	8 630	9 970	6 330	7 640	4 900	7 490	4 810	9.1 m
CWT : 7 000 kg	-1.5 m	kg			*14 620	*14 620	*19 890	12 960	13 840	8 500	9 870	6 240			8 090	5 180	8.6 m
	-3 m	kg	*17 030	*17 030	*23 090	*23 090	*18 620	13 090	13 890	8 550	9 940	6 310			9 380	5 980	7.8 m
	-4.5 m	kg			*21 550	*21 550	*15 930	13 440	*11 930	8 800					*10 460	7 800	6.6 m
Boom : 6.45 m HD	9 m	kg													*6 310	*6 310	7.3 m
	7.5 m	kg									*7 180	*7 180			*5 890	*5 890	8.4 m
Arm : 3.9 m GP	6 m	kg									*7 500	7 450	*7 020	5 410	*5 750	5 150	9.2 m
	4.5 m	kg							*9 180	*9 180	*8 260	7 180	*7 780	5 300	*5 790	4 610	9.7 m
Shoe : 600 mm	3 m	kg					*14 550	*14 550	*11 010	9 600	*9 260	6 850	7 900	5 130	*6 010	4 310	10 m
	1.5 m	kg					*17 760	13 640	*12 770	9 010	10 200	6 520	7 710	4 960	*6 420	4 200	10 m
CWT : 7 000 kg	0 m	kg			*8 990	*8 990	*19 510	13 000	13 970	8 590	9 920	6 270	7 550	4 820	6 680	4 260	9.8 m
	-1.5 m	kg	*9 180	*9 180	*13 740	*13 740	*19 930	12 770	13 720	8 370	9 750	6 120	7 480	4 750	7 120	4 530	9.3 m
	-3 m	kg	*14 320	*14 320	*19 870	*19 870	*19 240	12 800	13 680	8 340	9 740	6 110			8 050	5 110	8.6 m
	-4.5 m	kg	*20 490	*20 490	*24 330	*24 330	*17 310	13 050	*13 020	8 490					*9 770	6 320	7.5 m
	-6 m	kg			*18 300	*18 300	*13 300	*13 300							*9 910	9 480	5.8 m
Boom : 6.45 m HD	7.5 m	kg													*9 240	8 270	7.0 m
	6 m	kg							*9 790	*9 790	*9 170	7 360			*9 170	6 640	8.0 m
Arm : 2.6 m HD	4.5 m	kg					*14 310	*14 310	*11 160	10 050	*9 710	7 160			8 890	5 810	8.5 m
	3 m	kg							*12 790	9 500	*10 510	6 890			8 310	5 390	8.8 m
Shoe : 800 mm	1.5 m	kg							*14 130	9 060	10 400	6 650			8 170	5 270	8.8 m
	0 m	kg					*20 140	13 330	14 320	8 820	10 230	6 500			8 430	5 410	8.6 m
CWT : 7 000 kg	-1.5 m	kg			*14 470	*14 470	*19 400	13 370	14 250	8 760	10 200	6 470			9 230	5 900	8.1 m
	-3 m	kg			*23 280	*23 280	*17 640	13 590	*13 500	8 890					*10 740	7 010	7.2 m
	-4.5 m	kg			*18 440	*18 440	*14 160	14 050							*10 660	9 760	5.8 m
Boom : 6.45 m HD	7.5 m	kg									*8 310	7 570			*7 520	7 270	7.7 m
	6 m	kg									*8 420	7 500			*7 310	6 000	8.5 m
Arm : 3.2 m HD	4.5 m	kg					*12 790	*12 790	*10 320	10 260	*9 100	7 270	*8 090	5 400	*7 390	5 320	9.1 m
	3 m	kg					*16 430	14 700	*12 070	9 680	*10 010	6 980	8 100	5 270	7 640	4 970	9.3 m
Shoe : 800 mm	1.5 m	kg					*19 100	13 770	*13 620	9 180	10 470	6 700	7 960	5 140	7 510	4 850	9.4 m
	0 m	kg					*20 110	13 370	14 370	8 860	10 250	6 500	7 860	5 040	7 700	4 950	9.1 m
CWT : 7 000 kg	-1.5 m	kg			*14 650	*14 650	*19 890	13 300	14 220	8 730	10 150	6 420			8 320	5 330	8.6 m
	-3 m	kg	*17 060	*17 060	*23 130	*23 130	*18 610	13 440	*14 080	8 780	10 220	6 480			9 660	6 150	7.8 m
	-4.5 m	kg			*21 530	*21 530	*15 920	13 780	*11 920	9 040					*10 460	8 020	6.6 m
Boom : 6.45 m HD	9 m	kg													*6 310	*6 310	7.3 m
	7.5 m	kg									*7 180	*7 180			*5 890	*5 890	8.4 m
Arm : 3.9 m GP	6 m	kg									*7 500	*7 500	*7 030	5 550	*5 750	5 290	9.2 m
	4.5 m	kg							*9 180	*9 180	*8 270	7 350	*7 780	5 440	*5 800	4 740	9.7 m
Shoe : 800 mm	3 m	kg					*14 570	*14 570	*11 020	9 830	*9 270	7 020	8 120	5 270	*6 010	4 430	10 m
	1.5 m	kg					*17 770	13 980	*12 770	9 240	*10 280	6 700	7 930	5 100	*6 420	4 320	10 m
CWT : 7 000 kg	0 m	kg			*9 010	*9 010	*19 520	13 340	*14 030	8 820	10 190	6 440	7 770	4 960	6 880	4 390	9.8 m
	-1.5 m	kg	*9 200	*9 200	*13 760	*13 760	*19 930	13 110	14 100	8 600	10 030	6 300	7 700	4 890	7 330	4 670	9.3 m
	-3 m	kg	*14 350	*14 350	*19 900	*19 900	*19 230	13 140	14 060	8 570	10 020	6 280			8 290	5 260	8.6 m
	-4.5 m	kg	*20 520	*20 520	*24 310	*24 310	*17 300	13 390	*13 010	8 720					*9 770	6 510	7.5 m
	-6 m	kg			*18 270	*18 270	*13 270	*13 270							*9 910	9 750	5.7 m

Notes: 1. Machine in "Fine Mode-F" (Power Boost) for lifting capacities. 2. The above loads are in compliance with SAE J1097 and ISO 10567 Hydraulic Excavator Lifting Capacity Standards. 3. Rated loads do not exceed 87% of hydraulic lifting capacity or 75% of tipping load. 4. Rated loads marked with an asterisk (*) are limited by hydraulic capacity rather than tipping load.

LIFTING CAPACITY EC360F NL

Lifting capacity at the arm end without bucket.
For lifting capacity including bucket, simply subtract actual weight of the direct fit bucket or the bucket with quick coupler from the following values.

	Lifting hook related to ground level		1.5 m		3.0 m		4.5 m		6.0 m		7.5 m		9.0 m		Max. reach		Max.
			Along UC	Across UC	Along UC	Across UC	Along UC	Across UC	Along UC	Across UC	Along UC	Across UC	Along UC	Across UC	Along UC	Across UC	m
Boom : 6.45 m GP	7.5 m	kg													*9 270	7 480	7.0 m
	6 m	kg							*9 810	9 520	*9 200	6 640			*9 200	5 990	8.0 m
Arm : 2.6 m HD	4.5 m	kg					*14 330	13 870	*11 190	9 050	*9 750	6 450			8 630	5 230	8.5 m
	3 m	kg							*12 840	8 520	10 360	6 190			8 060	4 840	8.8 m
Shoe : 600 mm	1.5 m	kg							14 170	8 100	10 100	5 960			7 920	4 720	8.8 m
	0 m	kg					*20 240	11 800	13 900	7 870	9 930	5 820			8 180	4 850	8.6 m
CWT : 7 000 kg	-1.5 m	kg			*14 420	*14 420	*19 500	11 850	13 840	7 820	9 900	5 790			8 960	5 290	8.1 m
	-3 m	kg			*23 430	*23 430	*17 750	12 050	*13 580	7 940					10 710	6 280	7.2 m
	-4.5 m	kg			*18 590	*18 590	*14 270	12 480							*10 730	8 730	5.8 m
Boom : 6.45 m GP	7.5 m	kg									*8 410	6 900			*7 540	6 630	7.7 m
	6 m	kg									*8 520	6 840			*7 340	5 480	8.5 m
Arm : 3.2 m GP	4.5 m	kg					*12 900	*12 900	*10 430	9 310	*9 210	6 620	8 050	4 920	*7 410	4 850	9.1 m
	3 m	kg					*16 600	13 200	*12 200	8 770	*10 130	6 340	7 920	4 800	7 470	4 520	9.3 m
Shoe : 600 mm	1.5 m	kg					*19 320	12 340	*13 780	8 300	10 230	6 090	7 780	4 670	7 340	4 410	9.4 m
	0 m	kg					*20 350	11 980	14 050	8 010	10 020	5 900	7 690	4 590	7 530	4 500	9.1 m
CWT : 7 000 kg	-1.5 m	kg			*14 650	*14 650	*20 130	11 910	13 910	7 890	9 930	5 820			8 140	4 840	8.6 m
	-3 m	kg	*17 050	*17 050	*23 110	*23 110	*18 850	12 040	13 960	7 930	9 990	5 880			9 430	5 580	7.8 m
	-4.5 m	kg			*21 850	*21 850	*16 150	12 350	*12 100	8 170					*10 610	7 250	6.6 m
Boom : 6.45 m GP	9 m	kg													*6 310	*6 310	7.3 m
	7.5 m	kg									*7 200	7 010			*5 890	5 650	8.4 m
Arm : 3.9 m GP	6 m	kg									*7 520	6 880	*7 020	5 000	*5 750	4 760	9.2 m
	4.5 m	kg							*9 200	*9 200	*8 290	6 630	*7 810	4 890	*5 790	4 250	9.7 m
Shoe : 600 mm	3 m	kg					*14 600	13 500	*11 050	8 820	*9 300	6 310	7 870	4 730	*6 010	3 970	10 m
	1.5 m	kg					*17 830	12 400	*12 820	8 260	10 160	6 000	7 680	4 560	*6 420	3 860	10 m
CWT : 7 000 kg	0 m	kg			*8 990	*8 990	*19 600	11 800	13 920	7 860	9 890	5 760	7 530	4 430	6 660	3 910	9.8 m
	-1.5 m	kg	*9 180	*9 180	*13 740	*13 740	*20 020	11 580	13 680	7 660	9 730	5 620	7 460	4 360	7 100	4 160	9.3 m
	-3 m	kg	*14 320	*14 320	*19 870	*19 870	*19 340	11 620	13 650	7 630	9 710	5 600			8 030	4 700	8.6 m
	-4.5 m	kg	*20 490	*20 490	*24 470	23 420	*17 410	11 850	*13 090	7 780					*9 820	5 810	7.5 m
	-6 m	kg			*18 430	*18 430	*13 380	12 360							*9 980	8 700	5.8 m
Boom : 6.45 m GP	7.5 m	kg													*9 270	7 580	7.0 m
	6 m	kg							*9 810	9 640	*9 210	6 740			*9 200	6 080	8.0 m
Arm : 2.6 m HD	4.5 m	kg					*14 350	14 050	*11 200	9 180	*9 750	6 550			8 770	5 310	8.5 m
	3 m	kg							*12 840	8 650	10 530	6 290			8 200	4 920	8.8 m
Shoe : 800 mm	1.5 m	kg							*14 190	8 230	10 270	6 060			8 060	4 800	8.8 m
	0 m	kg					*20 240	11 990	14 130	8 000	10 100	5 910			8 320	4 930	8.6 m
CWT : 7 000 kg	-1.5 m	kg			*14 470	*14 470	*19 500	12 040	14 070	7 950	10 070	5 890			9 120	5 380	8.1 m
	-3 m	kg			*23 420	*23 420	*17 740	12 240	*13 570	8 070					*10 800	6 390	7.2 m
	-4.5 m	kg			*18 560	*18 560	*14 250	12 680							*10 730	8 880	5.8 m
Boom : 6.45 m GP	7.5 m	kg									*8 400	7 000			*7 540	6 720	7.7 m
	6 m	kg									*8 520	6 930			*7 340	5 560	8.5 m
Arm : 3.2 m GP	4.5 m	kg					*12 920	*12 920	*10 440	9 440	*9 210	6 720	*8 110	5 000	*7 410	4 930	9.1 m
	3 m	kg					*16 610	13 390	*12 210	8 900	*10 130	6 440	8 060	4 880	7 600	4 600	9.3 m
Shoe : 800 mm	1.5 m	kg					*19 330	12 530	*13 780	8 430	10 400	6 180	7 920	4 750	7 470	4 480	9.4 m
	0 m	kg					*20 350	12 170	14 280	8 140	10 190	6 000	7 820	4 660	7 670	4 580	9.1 m
CWT : 7 000 kg	-1.5 m	kg			*14 680	*14 680	*20 130	12 100	14 150	8 020	10 100	5 920			8 280	4 920	8.6 m
	-3 m	kg	*17 080	*17 080	*23 150	*23 150	*18 840	12 230	14 200	8 060	10 170	5 980			9 600	5 680	7.8 m
	-4.5 m	kg			*21 830	*21 830	*16 130	12 540	*12 090	8 300					*10 610	7 380	6.6 m
Boom : 6.45 m GP	9 m	kg													*6 310	*6 310	7.3 m
	7.5 m	kg									*7 200	7 110			*5 890	5 730	8.4 m
Arm : 3.9 m GP	6 m	kg									*7 520	6 980	*7 030	5 080	*5 750	4 830	9.2 m
	4.5 m	kg							*9 210	*9 210	*8 290	6 730	*7 810	4 970	*5 800	4 320	9.7 m
Shoe : 800 mm	3 m	kg					*14 610	13 680	*11 060	8 950	*9 300	6 410	8 000	4 810	*6 010	4 040	10 m
	1.5 m	kg					*17 840	12 590	*12 820	8 390	*10 320	6 100	7 820	4 640	*6 420	3 930	10 m
CWT : 7 000 kg	0 m	kg			*9 010	*9 010	*19 610	11 990	*14 090	7 990	10 060	5 850	7 670	4 500	6 780	3 990	9.8 m
	-1.5 m	kg	*9 200	*9 200	*13 760	*13 760	*20 020	11 770	13 920	7 790	9 900	5 710	7 600	4 440	7 240	4 240	9.3 m
	-3 m	kg	*14 350	*14 350	*19 900	*19 900	*19 330	11 810	13 880	7 760	9 890	5 700			8 180	4 780	8.6 m
	-4.5 m	kg	*20 520	*20 520	*24 450	23 780	*17 400	12 050	*13 080	7 910					*9 820	5 920	7.5 m
	-6 m	kg			*18 400	*18 400	*13 360	12 560							*9 980	8 860	5.7 m

Notes: 1. Machine in “Fine Mode-F” (Power Boost) for lifting capacities. 2. The above loads are in compliance with SAE J1097 and ISO 10567 Hydraulic Excavator Lifting Capacity Standards. 3. Rated loads do not exceed 87% of hydraulic lifting capacity or 75% of tipping load. 4. Rated loads marked with an asterisk (*) are limited by hydraulic capacity rather than tipping load.

Equipment

STANDARD AND OPTIONAL EQUIPMENT	
• = Standard / o = Optional	
Engine	
Turbocharged, 6 stroke diesel engine with water cooling, direct injection and charged air cooler that meets EU StageV/ NA T4f requirements	•
Cooling system by fan clutch	•
New work mode with 10 steps	•
Cyclone pre-cleaner	•
Fuel shut off valve	•
Engine block heater	o
Coolant heater by diesel	o
Reversible fan drive	o
Precleaner, oil bath	o
Air filter, High efficiency	o
Delayed engine Shutdown	o
Automatic engine shutdown	o
Water separator with heater	o
Electric / Electronic control system	
Anti-theft with code lock system	•
Alternator, 120 A	•
Automatic idling system	•
Lock Out / Tag Out function on main battery switch	•
Standard light	•
Basic light package	o
Advanced light package	o
Deluxe light package	o
Arm light	o
LH light	o
Undercarriage and structures	
3-point side access	•
Direct filling DEF(AdBlue) / Splash guard	•
Openable 3 piece hood	•
Guardrail, fixed/foldable	o
Inner rail	o
SIPS (Side Impact Protection Steel)	o
HD Side door & hood with screen	o
Without lower structure	o
Lower frame,NLC	o
Link 600 / 700 / 800 / 900 mm triple grouser shoe	o
Link 600 mm triple grouser shoe, HD	o
Link 600 mm double grouser shoe	o
Link 750 mm single grouser shoe	o
Hydraulic System	
EH(Electro-Hydraulic) control system	•
Auto power boost	•
One touch power boost	•
Priority Adjustment	•
Boom down speed control	•
Shock reduction function	•
Joystick, Semi-long / 4 switch / 4 switch & 1 proportional / Simple L8 / L8	o
Hydraulic oil mineral 32 / 46 / 68	o
Longlife hyd oil mineral 32 / 46 / 68	o
Hydraulic oil bio 46	o
Pattern change	o
Boom float function	o
Straight travel pedal	o
Comfort driving control	o
Creep mode	o
Variable X3 P-Q control	o
Hose rupture valve for boom	•
Hose rupture valve for arm	•

STANDARD AND OPTIONAL EQUIPMENT	
• = Standard / o = Optional	
Machine control technology	
Kinematic sensor package	•
Volvo Co-Pilot 2nd display, 12.8” touchable Full HD	•
Dig Assist, Start	o
Dig Assist, 2D	o
Dig Assist, In-Field Design	o
Dig Assist, Topcon 3D-MC	o
Dig Assist, Infield-Design Advanced	o
Dig Assist, On-Board Weighing	o
Dig Assist, Laser Receiver	o
Volvo Active Control	o
Dig Assist, Boundary Limit	o
Cab and interior	
Keyless engine start and stop	•
8” HD display	•
ROPS certified cab	•
Tiltable left console	•
Digital hour meter	•
Wireless mobile charger with Kinematic sensor package option	•
Various storage space with cool/heated	•
Cleaning air gun	o
One piece windshield cab	o
High visibility cab	o
Cabin large mirror, Heated	o
Cabin large mirror	o
Basic / Premium / Deluxe seat	o
Seat belt, 2 inch 2 point / 3 inch 2 point / 3 inch 3 point	o
Climate control-HEPA filter	o
Radio with MP3 / USB / Bluetooth	o
Front rain shield	o
Sun screen	o
Lower wiper	o
Sun shield, roof hatch	o
Foot rest, High mount	o
FOG (Falling Object Guard)	o
FOPS (Falling Object Protection Structure)	o
Safety net	o
Digging equipment	
Boom: 6.45 m monoblock	•
Arm: 3.2 m	•
Arm: 2.6 m	o
Arm: 3.9 m	o
Safety	
Travel alarm, beep / white noise	o
Flashing beacon, LED	o
Green light beacon	o
Rear view camera	•
Side view camera	•
HD VSV(Volvo Smart View)	o
HD VSV with obstacle detection	o
Provision, HD VSV with obstacle detection	o
Service and Maintenance	
Swing out A/C condenser	•
Fuel filler pump	o
Quick Hydraulic Oil Fill connection	o
Jump start connector	o
Auto lubrication system	o
Tool kit	o

Not all products are available in all markets. Under our policy of continuous improvement, we reserve the right to change specifications and design without prior notice.
The illustrations do not necessarily show the standard version of the machine.

VOLVO
EC360

VOLVO

Ref. No 20064047_D / English-21 / 2026.08 / EXC / Volvo, Global Marketing