VOLVO



Volvo Articulated Hauler 39 t

A40 ELECTRIC

Volvo Construction Equipment

A40 ELECTRIC

The world's first battery powered articulated hauler in its class: cleaner, quieter and more sustainable jobsites – without compromising performance.



Electric hauling starts here

60-years after Volvo Construction Equipment transformed the industry with Gravel Charlie – the world's first articulated hauler – Volvo is once again leading the way with the A40 Electric, the world's first battery powered articulated hauler in its class. With zero tailpipe emissions, the A40 Electric delivers the legendary off-road capability, operator comfort, and toughness you expect from Volvo, combined with the added benefits of reduced environmental impact, improved energy efficiency, quieter operation and lower maintenance demands.



The world's first battery powered articulated hauler in its class

- Zero tailpipe emissions
- Low noise for enhanced operator experience
- Impressive runtime - most jobs can be managed without interrupting the site production process
- Fast and easy charging
- Lower energy costs
- Less maintenance requirements and cost
- Dramatic reduction in CO_2
- Eliminates harmful NOx gases and PM particles
- 350 kW CCS2 fast charging as standard
- Low-power DC for overnight charging



Volvo by your side, your electrification partner

- Production system approach considering shift planning, charging infrastructure and schedules
- Production optimization relative to production targets
- Site Optimization consultancy service
- Return on Investment calculations
- Tailored financial solutions
- My Equipment App

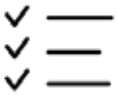

A range of charging solutions

- Extensive range of flexible charging solutions
- Solutions range from overnight 22 kW DC through to ultra-fast 400 kW DC
- Mobile power units enable off-grid charging
- With smart planning, most machines fit charging into breaks or overnight, maximizing uptime



Maximum productivity

- Proven Volvo drivetrain
- Automatic traction control, dynamic drive, adaptive shifting
- Superb tipping stability
- Excellent maneuverability



Safer, smarter working

- Cruise control
- Downhill speed control
- Dump support system
- Haul Assist
- Ambient lighting and integrated cameras
- Auxiliary brake with regenerative function



Easy and safe servicing

- Service access is quick and easy
- Essential maintenance points accessible from the ground level or guarded platforms
- Ground level electrical service center with service switch (including Lock Out Tag Out)

Why move to electric?

- Meet sustainability targets
- Stay ahead of regulations
- Long-term return on investment
- Present your company as forward-thinking and forward moving

Unrivalled operator comfort

- Low noise A40 Electric takes the already class-leading operator environment to a new level
- Providing the highest levels of operator comfort
- Helping your business attract and retain the very best operators
- Intuitive interface, ergonomic controls, spacious cab and premium seat options
- Easy entry, smart storage and excellent visibility
- Keep operators safe, comfortable and productive, shift after shift
- A40 Electric has the same operator interface as a conventional diesel Volvo machine, enabling operators to effortlessly adapt to electrical machines and easily switch between conventional and electric machines



Unbeatable off-road performance

- Best-in-class off-road performance
- Proven Volvo drivetrain
- Automatic drive combinations and 100% differential locks
- All-terrain bogie and hydro-mechanical steering for unmatched traction, stability and precision control
- With Volvo Dynamic Drive, dynamic and predictive gear selection adapts to the operating conditions at hand
- Work harder for longer with sturdy, durable and heavy duty axles, contributing to higher uptime, reduced wear, longer service intervals and lower maintenance costs

Lower your total cost of ownership

- Successful integration of electric machinery can lower your total cost of ownership
- While it is true there may be an increased asset cost compared to its diesel counterpart, when considering savings on fuel and reduced maintenance requirements over a period of time, electric machines can deliver long-term value and a boost to your bottom line
- As part of your journey to electric, we can work with you to model real-world scenarios to help you understand the true return on investment you can expect from your Volvo electric machinery

Electrify your hauler operations

- Get ready to electrify your articulated hauler operations
- Impressive runtime and easy charging
- Zero tailpipe emissions and low-noise
- Cleaner, quieter and more sustainable jobsites – without compromising performance



Volvo A40 in detail

Electric / Electronic control system

600 V system.
540 kWh battery pack.

Electric motor	Volvo	Permanent Magnet Synchronous Motor
Nominal power	kW	350
Nominal power	hp	476
Max torque	Nm	2 525
Battery type		Lithium Ion (NCA)
Battery voltage	V	600
Battery capacity	kWh	540
Usable battery energy	kWh	432
Operating time*	h	6
DC Charging capacity	kW	350
Charging protocol		CCS2
Charging time (SOC 10% to 90%)	min	60
Operating ambient temperature	°C	-25 to +47

*Operating time is based on a duty cycle matching a conventional machine with a fuel consumption of 19 l/h.

Electrical System

All cables, sockets and pins are identified. Cables are enclosed in plastic conduits and secured to main frame. Prewired for options. Connectors meet IP67 standard for water-proofing as necessary

Voltage	V	24
Battery	V	2 x 12
Battery capacity	Ah	2 x 75
DC/DC converter 600/24 V	kW	2 x 7.5

Drivetrain

Torque converter with built-in lock-up function.
Transmission: Fully automatic Volvo PowerTronic planetary transmission with nine forward gears and three reverse gears. The transmission has the ability to skip gears for fast and accurate gear selection.
Dropbox: Volvo-developed, in-line design with high ground clearance and 100% longitudinal "dog clutch" type differential lock.
Axles: Heavy duty, purpose built Volvo design with fully floating axle shafts, planetary type hub reductions and 100% dog clutch type diff-lock. Automatic Traction Control system (ATC).

Reduction gearbox	Volvo	EPTO35
Torque converter		2.1:1
Transmission	Volvo	PT 2529
Dropbox	Volvo	IL2 ATC
Axles	Volvo	ARB H40

Brake System

Fully hydraulic, wet multiple disc brakes with enclosed, forced oil-cooled multiple discs on all wheels. Two circuit brake system. Complies with ISO 3450 at total machine weight.
Circuit division: One circuit for front axle and one for bogie axles.
Parking brake: Spring-applied disc brake acting on the trailer unit propeller shaft. When the parking brake is applied , the longitudinal differential is locked.
Auxiliary brake: In addition to the service brake, the electric hauler uses regenerative braking to maximize energy efficiency. When braking, the electric motor works as a generator and converts the machine's motion into electricity, which is fed back to the battery. The auxiliary brake replaces the Volvo Engine Brake (VEB) used on conventional diesel machines.

Steering System

Hydro-mechanical articulated steering, self compensating design.
Two double-acting steering cylinders.
Steering angle: 3,4 steering wheel turns lock-to-lock, ±45°.
Steering system: including secondary steering fulfills ISO 5010.

Chassis

Frames: box type, heavy duty. High strength steel, robot welded.
Rotating hitch: 100% maintenance free, fully sealed, with permanently greased tapered roller bearings

Cab

The Volvo cab features excellent all-around visibility created by a centrally positioned operator station, sloping hood, large rear-view mirrors and entrance camera. The one piece wide front windshield with large swipe area further enhances visibility.
The central instrument cluster, the integrated Co-pilot, gearshift lever, tipping lever and easy to reach switches ensure ease of operation. Controls are ergonomically designed and easy to understand. Large storage compartments and a cooled/heated box improves the operator comfort.
The spacious cab meets the ROPS/FOPS safety standards according to ISO3471, SAE J1040 / ISO3449, SAE J231.

Sound level in cab (ISO 6396) - L_{pA}	dB	67
External sound level (ISO 6395) - L_{WA}	dB	106

Hydraulic System

Four variable displacement piston pumps driven by the flywheel PTO. Two load-sensing used for steering and tipping and two electrical controlled used for fan, brake cooling and brake power supply. One ground-dependent piston pump for secondary steering mounted on the dropbox. Two return oil filters with magnetic cores provide effective oil filtration

System max working pressure	MPa	28

Dumping System

Patented Load and Dump Brake.
Dumping Cylinders: two single stage double acting cylinders.

Tipping angle	°	69
Tipping time with load	s	12
Lowering time	s	10

Body

Plate thickness		
Front	mm	8
Sides	mm	11
Bottom	mm	14
Chute	mm	16
Material		HB 450 steel

Load Capacity

		Standard Body
Load capacity	kg	39 000
Body, struck	m^3	18.7
Body, heaped 2:1	m^3	24
		With overhung tailgate
Body, struck	m^3	19.1
Body, heaped 2:1	m^3	25.1

Suspension

Front suspension: Fully hydraulic, with automatic leveling and stabilizer.
Rear suspension: 100% maintenance free. Straddle mounted bogie beam. Independent wheel movement via a 3-point mounting system.



Specifications

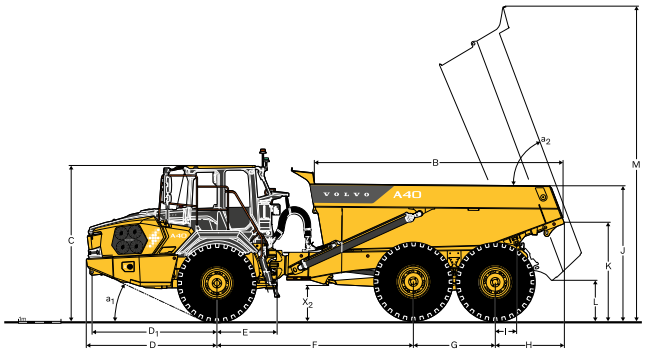

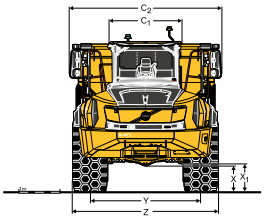

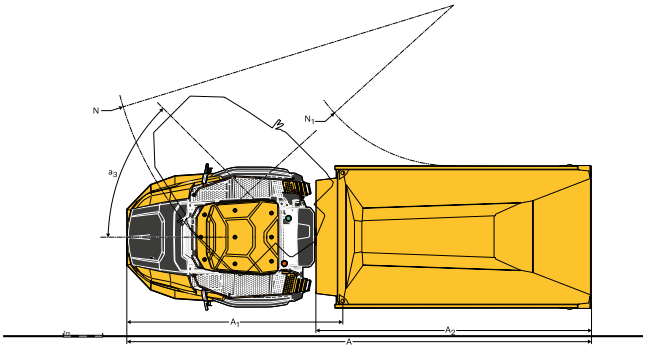

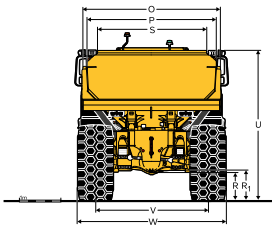

DIMENSIONS

Pos	Unit	A40
A	mm	11 261
A_1	mm	5 459
A_2	mm	6 418
B	mm	5 861
C	mm	3 626
C_1	mm	1 819
D	mm	3 084
D_1	mm	2 941
E	mm	1 277
F	mm	4 628
G	mm	1 940
H	mm	1 609
I	mm	494
J	mm	3 142
K	mm	2 434
L	mm	951
M	mm	7 400
N	mm	9 144
N_1	mm	4 429
O	mm	3 324
P	mm	3 118
Q	mm	2 820
R	mm	652
R_1	mm	744
S	mm	2 651
T	mm	3 458
U	mm	3 574
V	mm	2 636
W	mm	3 401
X	mm	583
X_1	mm	688
X_2	mm	821
Y	mm	2 636
Z	mm	3 400
a_1	°	25.3
a_2	°	69
a_3	°	45

A40: Unloaded machine with 29.5R25

REFILL CAPACITIES		
		A40
Motor Drive System, cooling system	l	14
Traction battery, cooling system	l	10
Brake cooling system	l	207
Transmission	l	42
Dropbox	l	9
Axles, front and bogie	l	79
Hydraulic tank	l	198

SPEED		
		A40
Forward		
1	km/h	5.8
2	km/h	8.5
3	km/h	10.4
4	km/h	15.0
5	km/h	21.6
6	km/h	27.3
7	km/h	36.1
8	km/h	47.8
9	km/h	57.0
Reverse		
1	km/h	6.5
2	km/h	9.4
3	km/h	18.0

OPERATING WEIGHT UNLOADED		
		A40 Electric
Tires		29.5R25*
Front	kg	20 200
Rear	kg	13 700
Total	kg	33 900
Payload	kg	39 000

Operating weight includes all fluids and operator

*) A40 with tires 875/65R29, add 300 kg /axle

TOTAL WEIGHT		
		A40 Electric
Tires		29.5R25*
Front	kg	24 800
Rear	kg	48 100
Total	kg	72 900

*) A40 with tires 875/65R29, add 300 kg /axle

GROUND PRESSURE			
		A40 Electric	
Tires		**29.5R25**	**875/65R29**
Unloaded			
Front	kPa	144	121
Rear	kPa	49	42
Loaded			
Front	kPa	177	148
Rear	kPa	172	144

Equipment

STANDARD EQUIPMENT
Cab/Operator enviroment
Operator seat with head restraint (air suspended and heated)
Electronic Climate Control
Cup holder / storage tray
Cell phone holder
Instructor seat with seat belt
Overhead console for CC Radio, Tachograph, etc.
Air suspended / heated operator seat
Sliding window
Cooled / Heated storage box
Front sun visor
Tilt/telescopic steering wheel
Loud speakers (4)
Dynamic instrument cluster and integrated Co-Pilot
Automatic pre-start checks
Troubleshooting diagnostics
Electric / Electronic control system 600 V
600 Volt propulsion system with 2 Permanent Magnet Synchronous Motors
Lithium Ion (NCA) battery pack with a total of 540 kWh battery capacity
DC Charging capacity up to 350 kW
Charging protocol according to CCS2
Auxiliary brake using regenerative braking to maximize energy efficiency
Wheels and tires
875/65R29
Drivetrain
6x4 and 6x6 Automatic Traction Control (ATC)
Dog clutch type 100% diff-locks in all axles
Cruise Control
Dropbox with longitudinal diff-lock
Torque converter with automatic lock-up in all gears

STANDARD EQUIPMENT
Electrical system 24 V
Battery disconnect switch
Electrical Interface
Charging studs
Power outlets
USB-C 2.0 (2)
USB-A 3.0 (1)
24 V (2)
Exterior and Interior lights (all LED)
Brake system
Two circuit, fully hydraulic, wet discs on all axles (externally cooled)
Down Hill Speed Control
Hill assist
Load & Dump Brake
Retarder pedal
Parking brake on propeller shaft
Dumping System
Body prepared for optional equipment
Safety
Anti-slip steps and platforms with handrails
Dump body lock
Steering joint lock
Harness anchor points
Rear-view mirrors
Retractable 3-inch 2-point safety belt
ROPS / FOPS protected Care Cab
Secondary steering
Dump support system
Positioning indicators (front and rear)
Entrance camera
Service and Maintenance
Grouped service points and filters
Ambient and service lights (LED)
Electrical engine hood
Belly plate with integrated service hatches
Drainage hoses
Tool box

OPTIONAL EQUIPMENT
Cab/Operator envioment
Anchorage, operator's manual
Cab heating / ventilation timer
Cable kit, for cab heater
Cab air filter (Asbestos dust protection)
Cab air filter (Carbon)
Rear view mirrors, adjustable, el.heated
Sun blinds, side windows
Universal key
Premium operator seat with head restraint (air suspended, cooled / heated), 2-point belt
Premium operator seat with head restraint (air suspended, cooled / heated), 3-point belt
Armrest for operator seat
Hands-free microphone
Radio AM / FM / DAB
Wheels and tires
29.5R25 (for special applications only)
Drivetrain
Long haul kit, dropbox cooling
Speed limiter (25/30 km/h)
Electrical system
Warning beacon, LED
Seatbelt indicator, external
Working lights front and rear, LED
Rear view camera
Front view camera
Reverse alarm
PDS interface, Safemine
Tire Pressure Monitoring System

OPTIONAL EQUIPMENT
Dumping System
Front spillguard, extra
Side extension, 200 mm
Side extension, 400 mm
Side extension, light material
Tailgate, overhung, wire-operated
Tailgate, overhung, linkage-operated
Tailgate, underhung
Wear plates, 450 HB
Wear plates heavy duty, 450 HB
Safety and security
Fire suppression system
Warning triangle
First aid kit and fire extinguisher
Fire extinguisher, external
Wheel chocks
Service and maintenance
Auto Lube system
Centralized greasing
Tool kit

Not all products are available in all markets. Under our policy of continuous improvement, we reserve the right to change specifications and design without prior notice.
The illustrations do not necessarily show the standard version of the machine.

Ref. No 20067376_A / English-21 / 2026.04 / ART / Volvo, Global Marketing

VOLVO