VOLVO PIPELAYER

PL4611

Volvo Pipelayers are purpose designed and built to meet the rugged application requirements of the pipeline industry. Their design provides state-of-the-art safety and lifting technology in a 360-degree working platform. Versatility to be converted to a conventional excavator further increases their potential for utilization.

MORE CARE. BUILT IN.

SPECIFICATIONS

Max. Tipping Capacity
110,000 kg **242,500 lb**

Engine
Volvo Pipelayers use the next generation diesel engine with Volvo Advanced Combustion Technology (V-ACT) to deliver lower emissions and maintain superior performance and fuel efficiency. The EU Stage IIIA / EPA Tier 3 compliant engine uses precise, high-pressure fuel injectors, turbo charger and air-to-air intercooler and electronic engine controls to optimize machine performance.

Engine	Volvo D12D EAE3	
Max. power, at	30 r/s	**1,800 rpm**
Net (ISO 9249, SAE J1349)	235 kW	**315 hp**
Gross (SAE J1995)	245 kW	**329 hp**
Max. torque @ 1,350 rpm	1,720 Nm	**1,269 lb-ft**
No. of cylinders	6	
Displacement	12.1 l	**738 cu in**
Bore	131 mm	**5.16"**
Stroke	150 mm	**5.91"**

Electrical system
High-capacity electrical system is well protected. Waterproof double lock harness plugs are used to secure corrosion-free connections. Main relays and solenoid valves are shielded to prevent damage.

Track Drive System
Each track is powered by an automatic shift two speed travel motor. Track brakes are multi-disc, spring applied and hydraulically released. Travel motors, brakes and planetary final drives are well protected within the track frame.

Travel speed 2.9/4.8 km/h **2.0/3.0 mph**

Undercarriage
Special purpose lower frame and track frame system provides a nearly square working platform, optimizing stability throughout full 360-degree swing. The heavy weight of the lower frame and heavily reinforced track frames lowers the machine center of gravity, increasing its stability. This also minimizes stresses on the upper frame and swing bearing, increasing lift capacity. Track frames are hydraulically pinned to the lower frame for ease of removal to reduce transport weight and width.

Hydraulic System
The hydraulic system is designed for high productivity, high lifting capabilities, high maneuvering precision and superb fuel economy.

Main Pump
Type: 2 x variable displacement axial piston
Maximum Flow: 2 x 345 l/min **2 x 91 gpm**

Pilot Pump
Type: Gear pump
Maximum Flow: 31 l/min **8.2 gpm**

Hydraulic Motors
Travel: Variable displacement axial piston motor with mechanical brake
Swing: Fixed displacement axial piston motor with mechanical brake

Cab
The new-design Volvo Care Cab with operator protective structure provides security along with more interior space, leg room and foot space. The fixed elevated cab riser provides a wide field of vision to the entire job site, winch, boom, and load block through maximum cab glass, transparent roof hatch and 2-piece sliding door window. This improves operator confidence, comfort, safety and effectiveness. Deluxe seat with adjustable height, tilt, recline, forward-back settings, retractable seat belt and selectable horizontal suspension cushions the operator from vibrations.

Boom
Asymmetric boom gives the operator clear view to load block at all heights and into the trench for safe, precise load placement. Long boom provides high hook height and reach allowing the machine to work further from the trench. The boom is mounted inside the track frames, close to the machine center, to increase lift capacity and stability.

Winch
Planetary, high line pull winch delivers smooth lifting performance and precise control. Winch hydraulic motor has multi-disc friction brake, which is spring applied and hydraulic released.

Load Management System
Operator confidence, effectiveness and safety are ensured with Volvo's Load Management System. Volvo Pipelayers utilize load, boom and cab mounted sensors that allow onboard computers to monitor boom angle and cab orientation and inclination. The computer uses this information to compute and display actual loads and rated working loads in real time through in-cab monitor and audible warning systems. This allows the operator to maintain full control of the machine from flat and level ground up to slopes of 35 degrees and throughout the 360 degree swing. The Load Management System utilizes boom-mounted load indicator lights for visual communication with ground staff and between adjacent machines during multiple lift operations.

Transportability
The PL4611 has a unique design that allows removal of the track frames from the base machine to reduce weight and width for transport. Coupled with the standard hydraulically removable rear counterweight, the PL4611 can self-disassemble in less than one hour and reassemble in similar time. Disassembly begins when the outriggers are deployed and the machine is raised off the ground. Then hydraulic pins that lock the track frames to the lower frame are disengaged allowing the Pipelayer to load its own side frames to a flatbed truck. Next the counterweight is hydraulically removed and loaded. Then the machine is raised to full outrigger height to allow a low-body truck to back in underneath it. Finally the outriggers are retracted to sit the base machine onto the lowboy and all components are chained for transport. The PL4611 is the most easily transported machine in its class.

THE PL4611 IN DETAIL

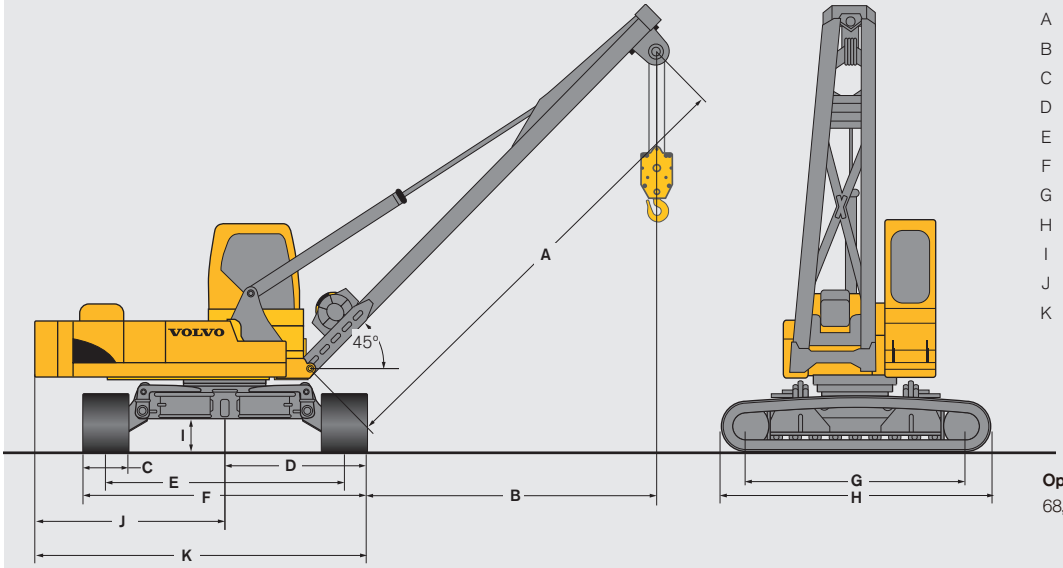

A	9,210 mm	**30' 3"**
B	5,826 mm	**19' 2"**
C	762 mm	**30"**
D	2,741 mm	**9' 0"**
E	4,720 mm	**15' 6"**
F	5,482 mm	**18' 0"**
G	4,370 mm	**14' 4"**
H	5,360 mm	**17' 7"**
I	650 mm	**2' 2"**
J	3,754 mm	**12' 4"**
K	6,496 mm	**21' 4"**

Operating Weight
68,140 kg / **150,220 lb**

LOAD CHART

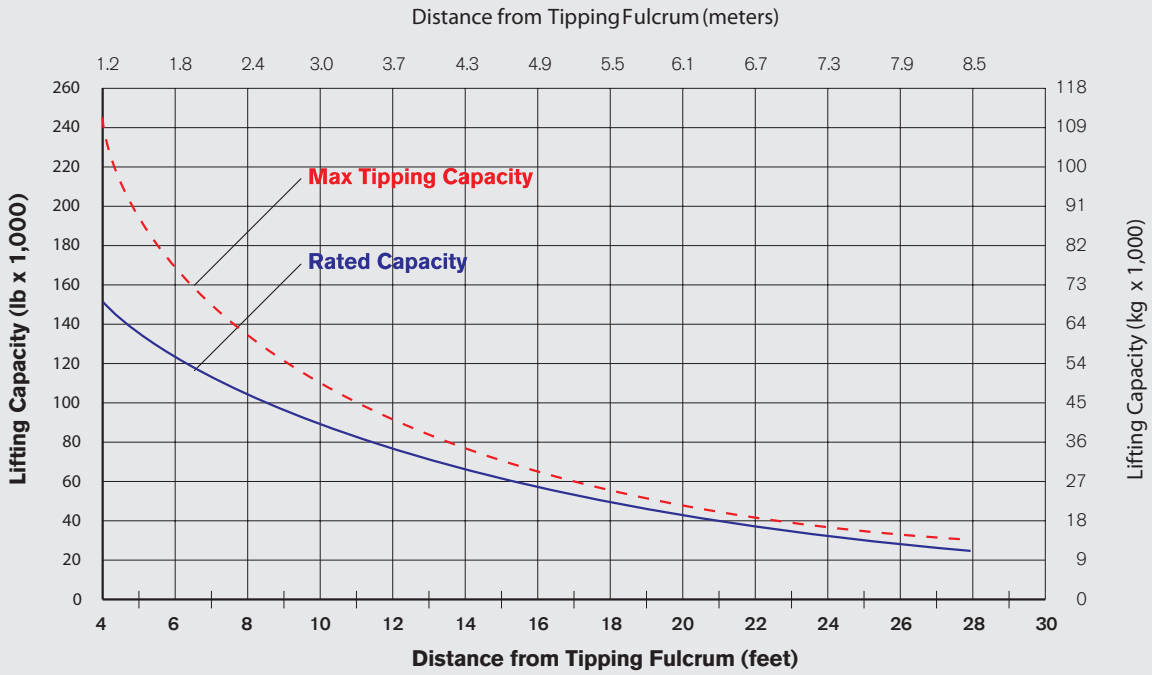

Footnotes

Max tipping capacity per ISO 8813, SAE J743, and ASME B30.14
Rated capacity per ISO 8813 and ASME B30.14
Lift capacity valid through 360 degree rotation

- Boom Length : 9.14 m **30 ft**
- Rear Counterweight Installed : 9,190 kg, **20,260 lb**
- Wire Rope : 25.4 mm 1" with minimum breaking strength of 50,000 kg **110,000 lb**
- Reeving on Load Block : 6 Parts
- Hydraulic Boom Cylinder Configuration

SHIPPING WEIGHTS AND DIMENSIONS

BASE MACHINE

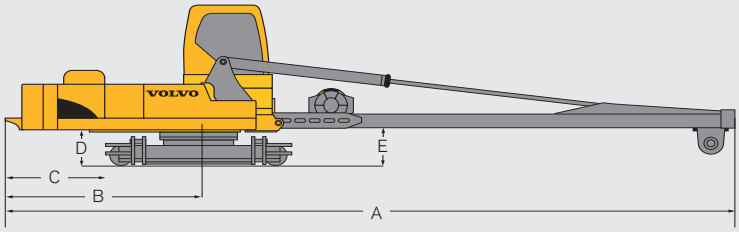

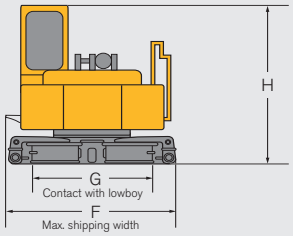

A	14,786 mm	**48' 6"**
B	3,406 mm	**11' 2"**
C	1,686 mm	**5' 6"**
D	817 mm	**2' 8"**
E	905 mm	**3' 0"**
F	3,553 mm	**11' 8"**
G	2,474 mm	**8' 2"**
H	3,556 mm	**11' 8"**

Weight : 41,785 kg **/ 92,120 lb**

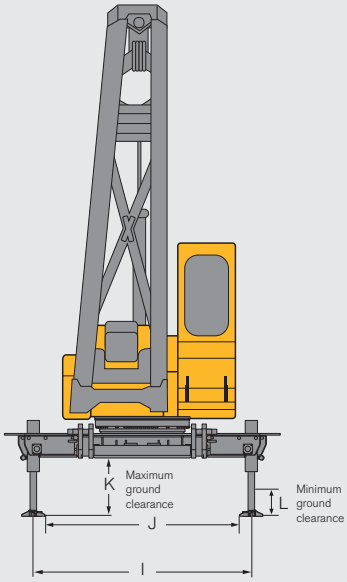

I	4,498 mm	**14' 8"**
J	4,098 mm	**13' 5"**
K	1,079 mm	**3' 6"**
L	457 mm	**1' 6"**

COMPONENT MODULES

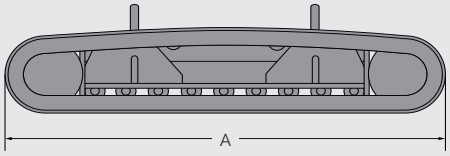

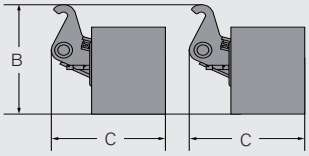

A	5,364 mm	**17' 7"**
B	1,348 mm	**4' 5"**
C	1,321 mm	**4' 4"**
D	2,990 mm	**9' 10"**
E	770 mm	**2' 6"**
F	1,105 mm	**3' 8"**

Track Frame (quantity 2) : 8,641 kg / **19,050 lb** each

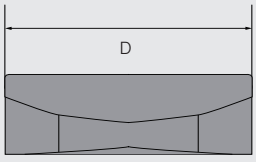

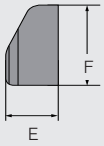

Rear Counterweight : 9,190 kg / **20,260 lb**

Capacities and performance specifications affected by configuration. Use only the capacities, specifications and procedures for the specific unit by serial number when operating, servicing or transporting the equipment. Not all products are available in all markets. Under Volvo's policy of continuous machine upgrades and improvements, we reserve the right to change specifications and design without prior notice. The illustrations do not necessarily show the standard version of the machine. Patent and patent pending in USA and other countries.

VOLVO

Volvo Construction Equipment

Volvo Construction Equipment North America, Inc.
One Volvo Drive, Asheville, NC 28803-3447
www.volvoce.com

Ref. No. 22 A 100 4533
Printed in USA 2008.03-1,0
Volvo, Konz

U.S. English
EXC